THIS DRAWING IS UNPUBLISHED. RELEASED FOR PUBLICATION -,- .
© COPYRIGHT 2011 BY TYCO ELECTRONICS CORPORATION. ALL RIGHTS RESERVED.

LOC	DIST
DW	—

REVISIONS

P	LTR	DESCRIPTION	DATE	DWN	APVD
	A1	REVISED (ECR-12-016992) REDRAW & UPDATE DRAWING LOGO TO TE CONNECTIVITY	28SEP'12	E.L.	W.K.

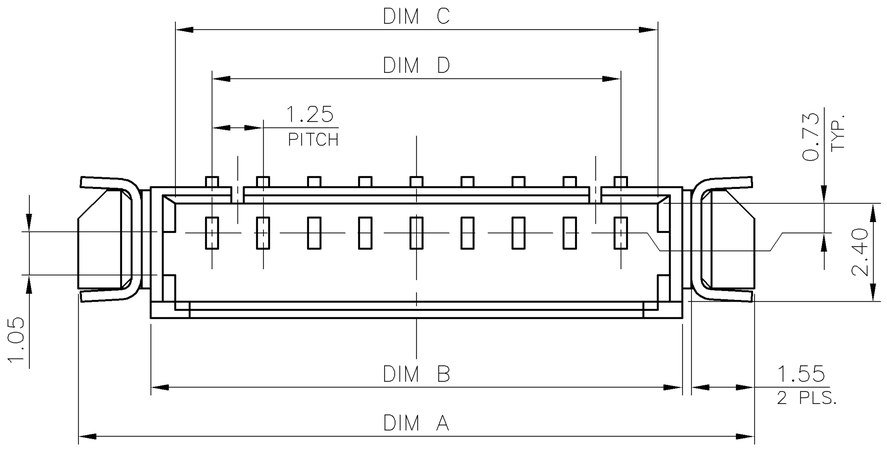

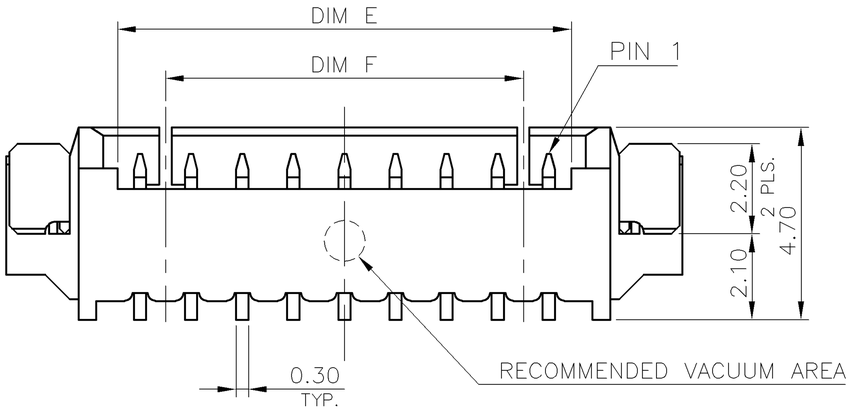

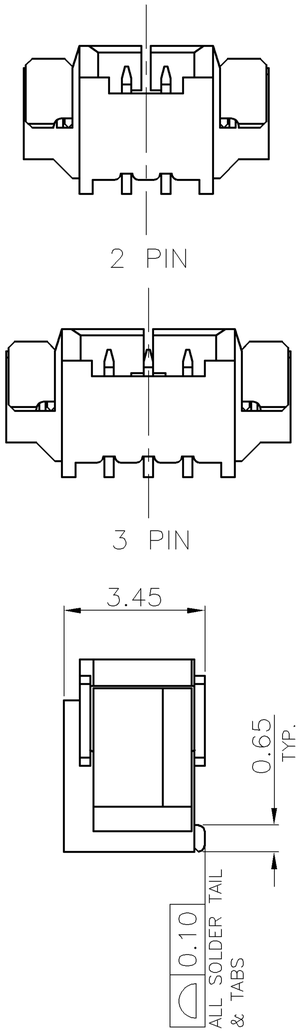

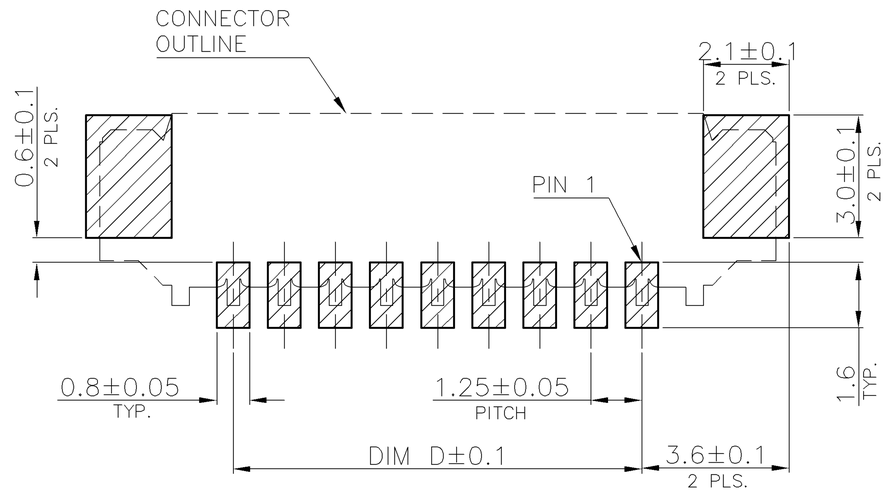

PCB LAYOUT FOR SURFACE MOUNTING

1. MATERIAL:
   HOUSING: LCP WITH 30% GF, UL94 V-0, NATURE COLOR.
   CONTACTS: PHOSPHOR BRONZE, 0.3±0.05mm THICKNESS.
   BOARDLOCKS: PHOSPHOR BRONZE, 0.25±0.05mm THICKNESS.
2. FINISH:
   CONTACTS: 2.54um [100u"] MIN. MATTE-TIN OVER
   1.27um [50u"] MIN. NICKEL.
   BOARDLOCKS: 2.54um [100u"] MIN. MATTE-TIN OVER
   1.27um [50u"] MIN. NICKEL.
3. REFLOW SOLDER CAPABLE TO 260°C
   PER TE TEST SPEC. 109-201, CONDITION B.
4. NO TE LOGO AND DATE CODE ON THE PRODUCT.
5. RECOMMENDED BASE NO. OF CABLE ASSEMBLY:
   HOUSING: 440146. (NON-LOW HALOGEN TYPE)
   CONTACT: 440147.
6. LOW HALOGEN SPEC:
   CHLORINE(Cl): 900ppm MAX.
   BROMIN(Br): 900ppm MAX.
   CHLORINE(Cl) & BROMIN(Br): 1500ppm MAX.

WEIGHT	DIMENSIONS F	E	D	C	B	A	NO. OF CONTACTS	PART NUMBER
0.44g	16.25	18.60	17.50	19.30	20.50	24.04	15	1-2041180-5
0.42g	15.00	17.35	16.25	18.05	19.25	22.79	14	1-2041180-4
0.40g	13.75	16.10	15.00	16.80	18.00	21.54	13	1-2041180-3
0.38g	12.50	14.85	13.75	15.55	16.75	20.29	12	1-2041180-2
0.36g	11.25	13.60	12.50	14.30	15.50	19.04	11	1-2041180-1
0.34g	10.00	12.35	11.25	13.05	14.25	17.79	10	1-2041180-0
0.30g	8.75	11.10	10.00	11.80	13.00	16.54	09	2041180-9
0.28g	7.50	9.85	8.75	10.55	11.75	15.29	08	2041180-8
0.26g	6.25	8.60	7.50	9.30	10.50	14.04	07	2041180-7
0.24g	5.00	7.35	6.25	8.05	9.25	12.79	06	2041180-6
0.20g	3.75	6.10	5.00	6.80	8.00	11.54	05	2041180-5
0.19g	2.50	4.85	3.75	5.55	6.75	10.29	04	2041180-4
0.18g		3.60	2.50	4.30	5.50	9.04	03	2041180-3
0.14g		2.35	1.25	3.05	4.25	7.79	02	2041180-2

THIS DRAWING IS A CONTROLLED DOCUMENT.

DIMENSIONS: mm

TOLERANCES UNLESS OTHERWISE SPECIFIED:

0 PLC	± -
1 PLC	± 0.3
2 PLC	± 0.2
3 PLC	± 0.15
4 PLC	± -
ANGLES	± 3°

MATERIAL: SEE NOTE

FINISH: SEE NOTE

DWN	F. YANG	03SEP2009
CHK	S. CHIEN	03SEP2009
APVD	W. KODAMA	03SEP2009

PRODUCT SPEC: 108-57273

APPLICATION SPEC: —

WEIGHT: SEE TABLE

TE Connectivity

NAME: WIRE-TO-BOARD MALE HEADER PITCH 1.25mm, R/A, SMT TYPE

SIZE	CAGE CODE	DRAWING NO	RESTRICTED TO
A3	00779	C-2041180	—

CUSTOMER DRAWING | SCALE — | SHEET 1 OF 2 | REV A1

THIS DRAWING IS UNPUBLISHED. RELEASED FOR PUBLICATION – , – .
© COPYRIGHT 2011 BY TYCO ELECTRONICS CORPORATION. ALL RIGHTS RESERVED.

LOC	DIST
DW	—

REVISIONS

P	LTR	DESCRIPTION	DATE	DWN	APVD
		SEE SHEET 1.			

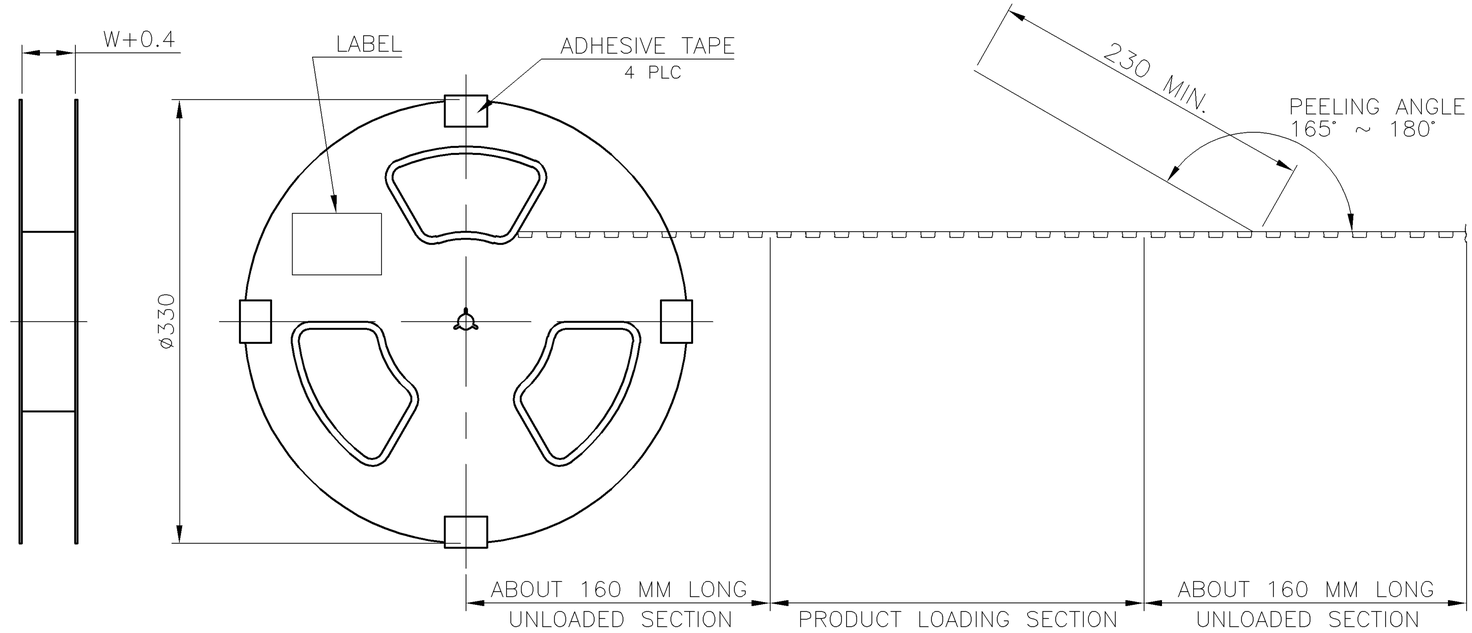

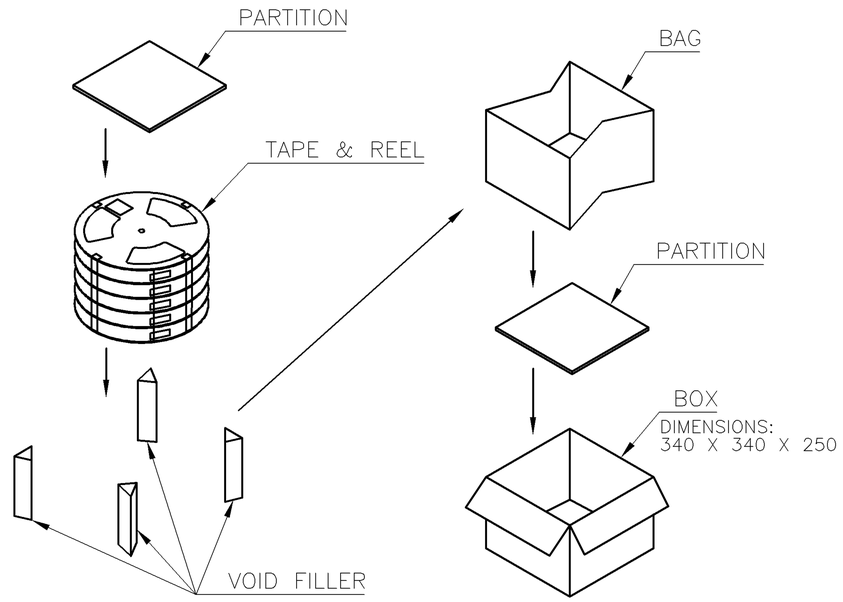

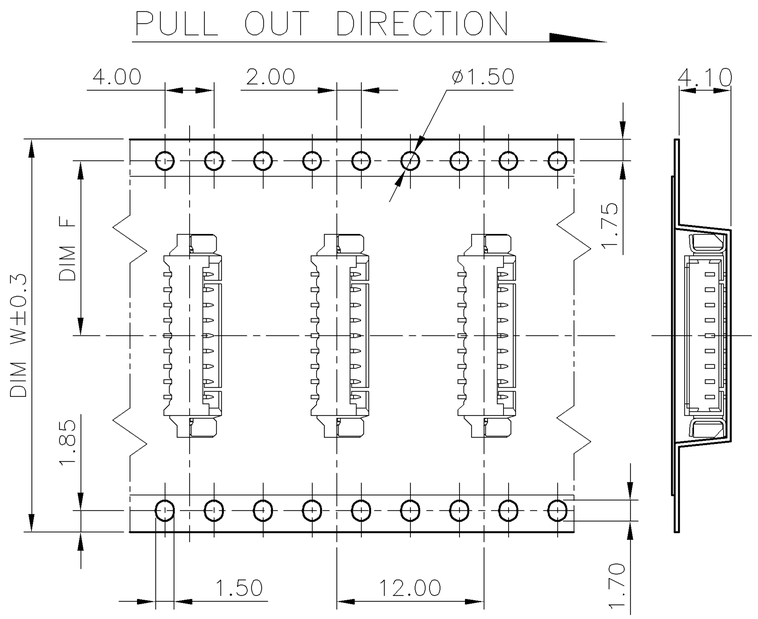

CARRIER FOR 8 TO 15 PIN

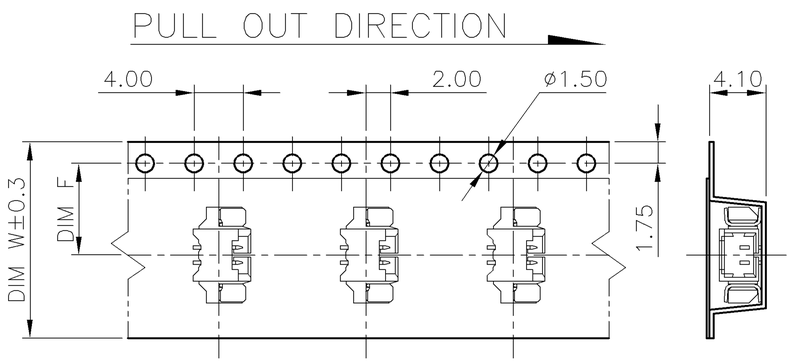

CARRIER FOR 2 TO 7 PIN

PCS/ REEL	REELS/ BOX	QUANTITY	DIM F	DIM W	G/W (KG)	N/W (KG)	NO. OF POS.
1000	4	4000	20.20	44	4.80	1.76	15
					4.70	1.68	14
					4.60	1.60	13
	6	6000	14.20	32	6.20	2.66	12
					5.90	2.28	11
					5.70	2.04	10
					5.44	1.84	09
					5.22	1.62	08
	7	7000	11.50	24	5.64	1.82	07
					5.50	1.68	06
					5.05	1.40	05
					5.00	1.27	04
	10	10000	7.50	16	5.60	1.80	03
					5.20	1.40	02

THIS DRAWING IS A CONTROLLED DOCUMENT.

DIMENSIONS: mm

TOLERANCES UNLESS OTHERWISE SPECIFIED:

0 PLC	± –
1 PLC	± 0.3
2 PLC	± 0.2
3 PLC	± 0.15
4 PLC	± –
ANGLES	± 3°

MATERIAL –

FINISH –

DWN –
CHK –
APVD –
PRODUCT SPEC –
APPLICATION SPEC –
WEIGHT –

CUSTOMER DRAWING

TE Connectivity

NAME

WIRE–TO–BOARD MALE HEADER
PITCH 1.25mm, R/A, SMT TYPE

SIZE	CAGE CODE	DRAWING NO	RESTRICTED TO
A3	00779	C–2041180	—

SCALE	SHEET	REV
—	2 OF 2	A1