CUSTOMER TERMINAL	RoHS	LEAD(Pb)-FREE
Sn96%, Ag4%	Yes	Yes

more than you expect

WÜRTH ELEKTRONIK

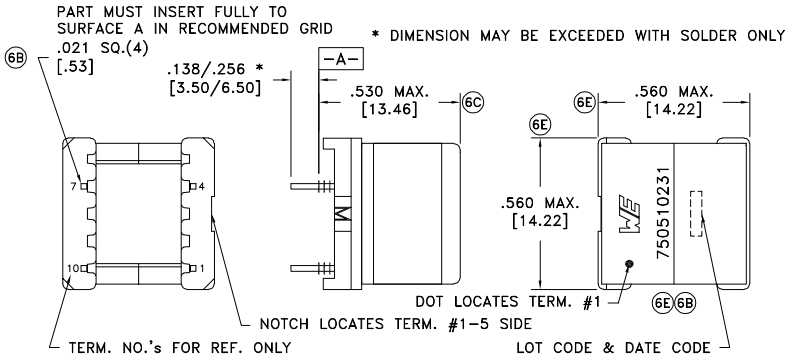

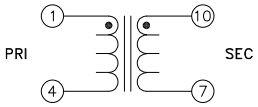

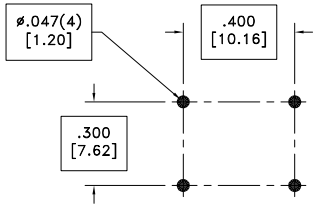

RECOMMENDED
P.C. PATTERN, COMPONENT SIDE

ELECTRICAL SPECIFICATIONS @ 25°C unless otherwise noted:

PARAMETER		TEST CONDITIONS	VALUE
D.C. RESISTANCE	1-4	@20°C	0.20 ohms max.
D.C. RESISTANCE	10-7	@20°C	0.20 ohms max.
6D INDUCTANCE	1-4	100kHz, 1.0VAC, 0/15mADC, Ls	1.00mH +35%/-25%
LEAKAGE INDUCTANCE	1-4	tie(7+10), 75kHz, 100mVAC, Ls	1.0uH max.
INTERWINDING CAPACITANCE	1-10	tie(1+4, 7+10), 75kHz, 1.0VAC, Cs	30pF max.
DIELECTRIC	1-10	2000VAC, 1 second	-
TURNS RATIO		(1-4):(10-7)	1:1, ±1%

GENERAL SPECIFICATIONS:
OPERATING TEMPERATURE RANGE: -20°C to +80°C.

6B Wire insulation & RoHS status not affected by wire color.
Wire insulation color may vary depending on availability.

DETAILS SUBJECT TO CHANGE

REV.	DATE
6E	8/22
6D	1/19
6C	6/17
6B	9/11

Packaging Specifications
Method: Tray
PKG-1292
www.we-online.com/midcom
6E
CONVENTION PLACEMENT
SEE REVISION SHEET FOR REVISION LEVEL

Tolerances unless otherwise specified:
Angles: ±1° Decimals: ±.005 [.13]
Fractions: ±1/64 Footprint: ±.001 [.03]
This drawing is dual dimensioned. Dimensions in brackets are in millimeters.

DRAWING TITLE
TRANSFORMER
eiSos p/n: 750510231
compliant RoHS

PART NO.
750510231
SPECIFICATION SHEET 1 OF 1