THIS DRAWING IS UNPUBLISHED. RELEASED FOR PUBLICATION: -/-/-
© COPYRIGHT - 2006 TYCO ELECTRONICS CORPORATION. ALL RIGHTS RESERVED.

REV	DIST
AA	22

REVISIONS

P	LTR	DESCRIPTION	DATE	BY	APVD
	B	ECO-09-005598	31MAR2009	VL	LR

MECHANICAL:

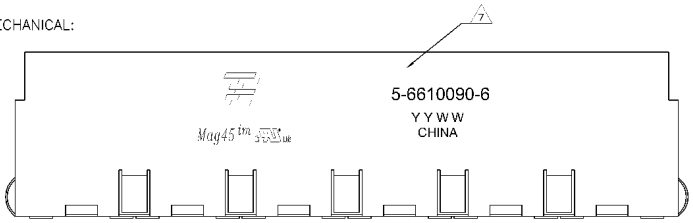

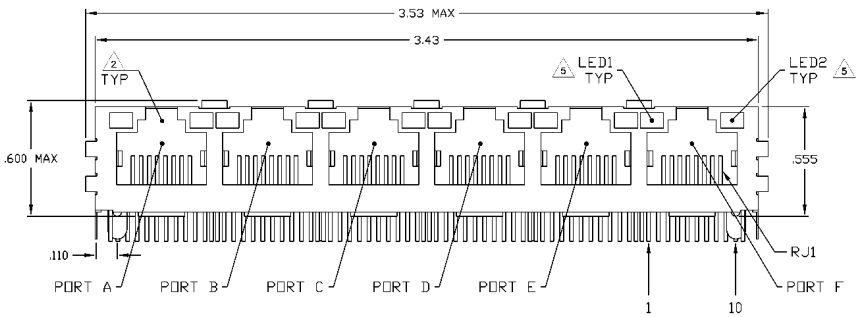

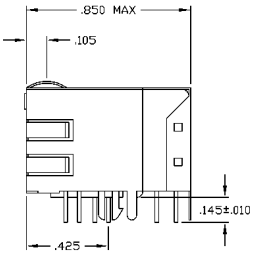

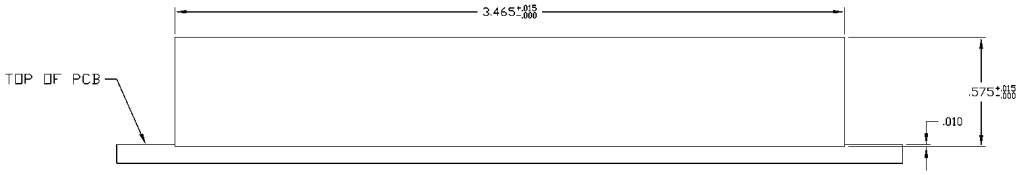

1X6 SUGGESTED PANEL CUTOUT

1. MATERIALS
   HOUSING: THERMOPLASTIC PBT POLYESTER FLAMMABILITY RATING UL 94V-0
   SHIELD: STAINLESS STEEL, 0.25MM THICK, 0.25MM BASS PREPLATED WITH 50µin MIN
   SEAM: STRAIGHT
   NOTE: SOLDER: ALL PCB SOLDER APPLIED WITH 100µin MIN SAN SOLDER.
   MODULAR CONTACTS: 0.0508 X 0.0381 PHOSPHOR BRONZE, 50µin MIN OVERALL.
   NOTE: UNDERPLATE: WHERE REQUIRED 50µin MIN NICKEL OR NICKEL PLATE
   SOLDER TAILS WITH 100µin MIN MATTE TIN AND/OR SAN SOLDER DIP.
   LIGHT EMITTING DIODE (LED): DIFFUSED EPOXY, RIGHT 0.2810 X 0.2510 CARBON STEEL
   NOTE: SAMPLE PARTS PREPLATED WITH 50µin NICKEL OVER 50µin NICKEL UNDERPLATE OVER 10µin COPPER UNDERPLATE POST PLATED WITH 100µin MIN
   NOTE: TIN AND/OR SAN SOLDER DIP OR PLATED SOLDER DIP

2. RJ45 JACK CAVITY CONFORMS TO FCC RJ-45 AND/OR SUBLANDING PART 68, SUBPART F

3. MAGNETICS
   IMPEDANCE: 100 OHMS
   TURNS RATIO: CHIP CAPACITOR FLAT, FOUR PAIRS
   OPEN CIRCUIT INDUCTANCE: 350µH MIN @ 100kHz, 8 ARMS, 8 MADC BIAS FROM 0°C TO 70°C, ALL FOUR PAIRS
   ALL FOUR PAIRS ARE ACTIVE
   PERFORMANCE @ 25°C
   INSERTION LOSS: 0.1-1MHz: -1dB MAX FROM 0.5MHz TO 100MHz
   RETURN LOSS: 1-30MHz: 18dB MIN FROM 0.5MHz TO 60MHz
   30-100MHz: 10dB MIN FROM 0.5MHz TO 100MHz
   CROSSTALK ATTENUATION: 30dB MIN FROM 0.5MHz TO 100MHz
   33.2Ω CRM/50Ω MIN FROM 30MHz TO 60MHz
   COMMON MODE REJECTION RATIO (CMRR): 40dB MIN FROM 0.5MHz TO 100MHz
   ISOLATION VOLTAGE COMPLIES WITH IEC60950-2, 2002, PARA 2.6.3.1, TYPE A

4. OPERATING TEMPERATURE FROM 0°C TO 70°C

5. LEDS ARE DRIVEN WITH 5V VOLTAGE AND THE MAX OPERATING CURRENT IS 20mA
   PRODUCES DOMINANT WAVELENGTH (λd): GREEN, 568nm TYP @ VF=5V
   FORWARD CURRENT: 1-1.5mA TYP @ VF=5V
   DOMINANT WAVELENGTH (λd): YELLOW, 585nm TYP @ VF=5V
   FORWARD CURRENT: 1-1.5mA TYP @ VF=5V

6. RECOMMENDED MAGNETIC CONNECTIONS ARE SYMMETRICAL AND SUPPORT AUTO-MDI/MDIX

7. TYCO ELECTRONICS CORPORATION PART NUMBER, DATE CODE, COUNTRY OF ORIGIN AND AGENCY APPROVAL MARKING APPROXIMATE COATING SHOWN

8. THE PART IS RECOMMENDED FOR WAVE SOLDERING PROCESS. PREHEAT TEMPERATURE IS 100°C TO 150°C, 120 SECONDS TO 180 SECONDS. PEAK WAVE SOLDERING TEMPERATURE 260°C MAX, 5 SECONDS MAX

GREEN/YELLOW	GREEN/YELLOW	5-6610090-6
LED1	LED2	PART NUMBER

THIS DRAWING IS A CONTROLLED DOCUMENT.

UNITS(DIM): INCHES

TOLERANCES UNLESS OTHERWISE SPECIFIED:
0 PLC ± -
1 PLC ± .1
2 PLC ± .015
3 PLC ± .005
4 PLC ± -
ANGLES ± -

MATERIAL 1 | FINISH 1

DWN: A. FERNANDEZ-SOCKO 19MAY2006
CHK: D. FAROLE 19MAY2006
APVD: D. FAROLE 19MAY2006

PRODUCT SPEC: 108-2100
APPLICATION SPEC: —
WEIGHT: —

Tyco Electronics
Tyco Electronics Corporation
Changzhou, China

TITLE: 1X6 MAG45(TM) MODULAR JACK, 7G1 GIG SCHEMATIC, 701P1 SERIES MAG CIRCUIT (10 PIN HORIZONTAL), DECOUPLING CAP, SHIELDED, WITH G/Y - O/Y LEDS.

SIZE: A1 | CAGE CODE: 00779 | DRAWING NO: C-6610090 | REVISED TO: —

CUSTOMER DRAWING | SCALE: 4:1 | SHEET 1 OF 2 | REV B

THIS DRAWING IS UNPUBLISHED. RELEASED FOR PUBLICATION: -/- -
© COPYRIGHT - - BY TYCO ELECTRONICS CORPORATION. ALL RIGHTS RESERVED.

REV	DIST	REVISIONS				
AA	22	P	LTR	DESCRIPTION	DATE	DWN	APVD
			—	SEE SHEET 1	-	—	—

7G01P1 SERIES MAGNETIC CIRCUIT 3 6

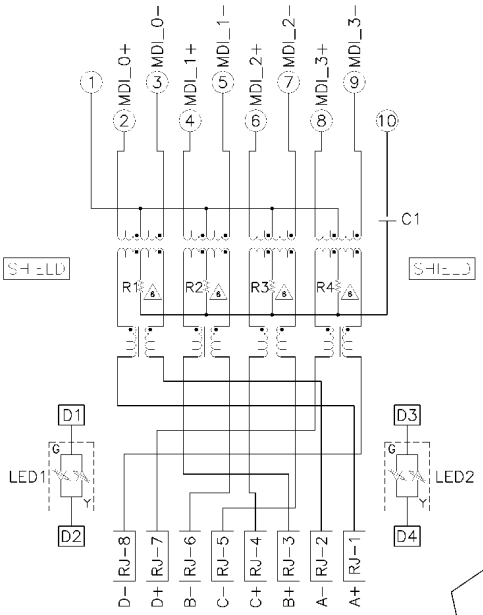

C1 = 1000pF, 2kV DECOUPLING CAPACITOR

R1-R4 = 75 OHMS, 1/16 W RESISTORS

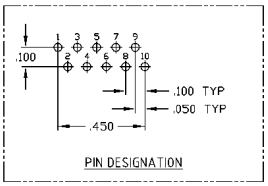

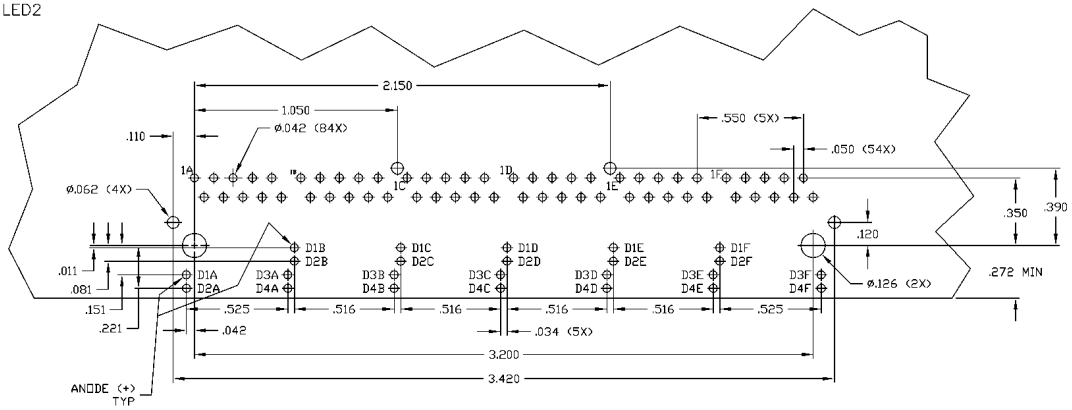

SUGGESTED PCB LAYOUT
(COMPONENT SIDE)

THIS DRAWING IS A CONTROLLED DOCUMENT.	DWN A. FERNANDEZ 10MAR2005 / CHK D. FARDLE 10MAR2005 / APVD D. FARDLE 10MAR2005	Tyco Electronics	Tyco Electronics Corporation, ChangPing, China
UNITS(DIM): INCHES	TOLERANCE UNLESS OTHERWISE SPECIFIED: 1 PLC ±, 2 PLC ±, 3 PLC ±.010, 4 PLC ±.005, 5 PLC ±, ANGLES ±, FINISH —	PRODUCT SPEC 108-2100 / APPLICATION SPEC —	NAME 1X8 MAG45(TM) MODULAR JACK, 7G1 GIG SCHEMATIC, 701P1 SERIES MAG CIRCUIT (10 PIN HORIZONTAL), DECOUPLING CAP, SHIELDED, WITH G/Y − O/Y LEDS.
MATERIAL —	WEIGHT —	SIZE A1 / CAGE CODE 00779 / DRAWING NO C-6610090	REFERENCE DIM —
	CUSTOMER DRAWING	SCALE 4:1 / SHEET 2 OF 2	REV B