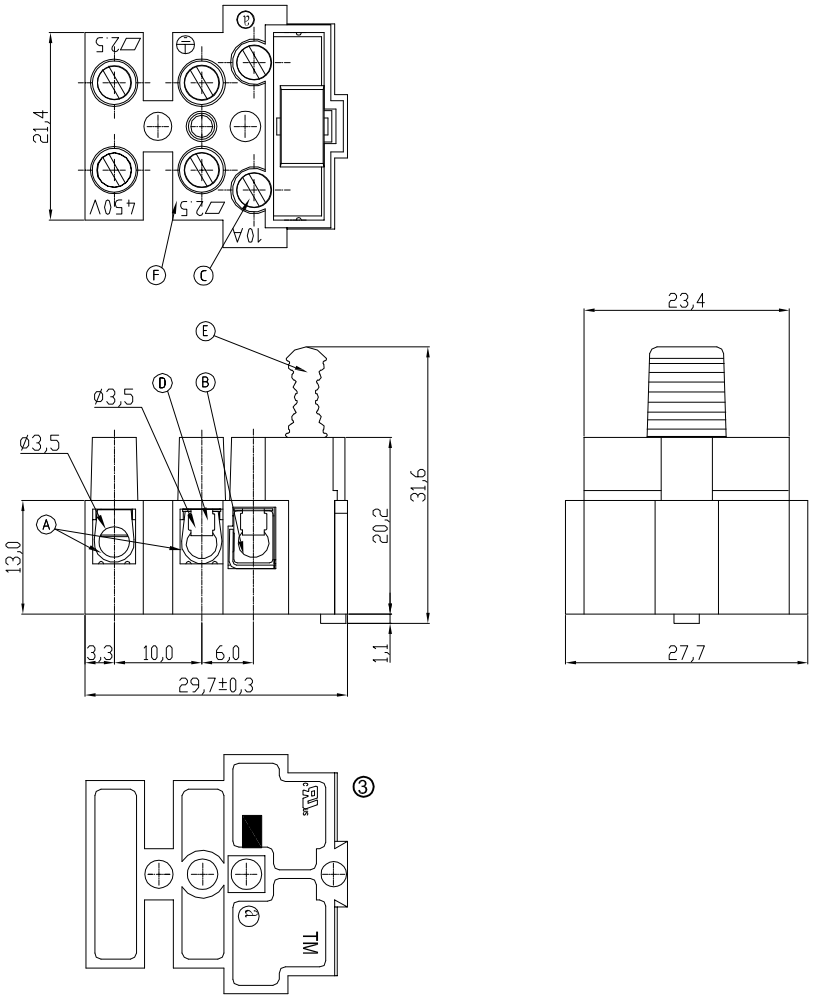

Material

Ⓐ Terminal body(metal housing of double): Brass(CuZn),Ni plated
Ⓑ Terminal body(metal housing of single): Brass(CuZn),Ni plated
Ⓒ Terminal screw: Steel Zinc plating "-" slot type
Ⓓ Wire guard: Steeless steel
Ⓔ Insulator (lever): Thermoplastic (UL94V-0)
Ⓕ Insulator (housing): Thermoplastic (UL94V-0)

Electrical

	cULus	VDE
Voltage rating:	400VAC	/ 450VAC
Current rating:	10A	/ 24A
Wire range:	0.34-2.5mm²	

Solid wire(AWG): 14-22
Stranded wire(AWG):14-22
Torque(Lb-In): 3.5 / 0.5
Screw: M3
Wire strip length: 7-8mm
Withstanding Voltage: 1.8KV/2.5KV
Operating temperature: -40°C to +115°C
Safety Approval: c us

RoHS compliant
Unit: mm

③ File No.: E349947

Scale	Free
TOLERANCE	
X.	±0.50
X.X	±0.30
X.XX	±0.10
DIM	TOL
X.°	±1°
Angle	TOL

Id.	Modification	Date	Name
③	Update to new drawing and add UL	15.03.2016	Amy
②	Updating	19.04.2010	Alex
①	Drawn	16.06.2006	Hellwig

	Date	Name
Drawn	16.06.2006	Hellwig
Approved	15.03.2016	Amy

ASSMANN WSW components

Customer-No.

ASSMANN WSW-No.
A-TB100-TM03

Drawing-No.
ASS 2011C CO

rev03

Replace

Sheet