LOADING PATTERN MATING SIDE

POS	01	02	03	04	05	06	07	08	09	10	11	12	13	14	15	16	17	18	19	20	21
f	6	6	6	6	6	6	6	6	6					6	6	6	6	6	6	6	6
e	5	5	5	5	5	5	5	5	5	5	5	5	5	5	5	5	5	5	5	5	5
d	5	5	5	5	5	5	5	5	5	5	5	5	5	5	5	5	5	5	4	5	4	4
c	5	5	5	5	5	5	5	5	5	5	5	5	5	5	5	5	5	5	5	5	5	5
b	5	5	5	5	5	5	5	5	5	5	5	5	5	5	5	5	5	5	5	5	5	5
a	5	5	5	5	5	5	5	5	5	5	5	5	5	5	5	5	5	5	5	5	5	5
z	0	0	0	0	0	0	0	0	0					0	0	0	0	0	0	0	0	0

LOADED CONNECTOR ASSEMBLY
(FOR EXAMPLE)

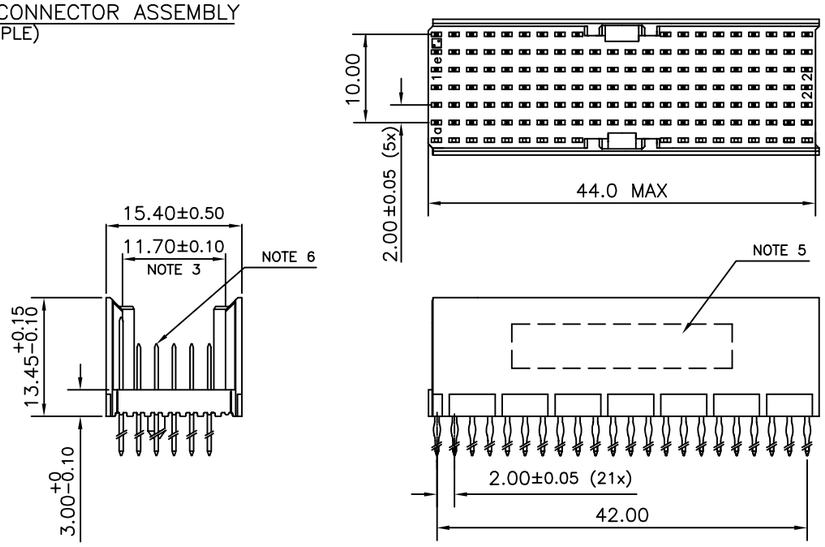

CONTACT OVERVIEW

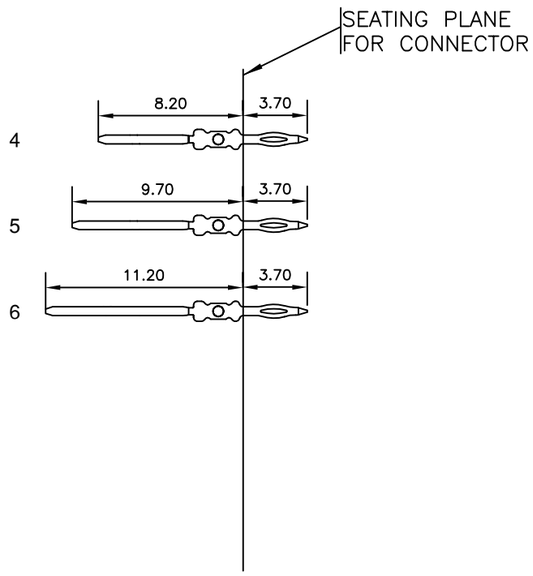

LAY-OUT P.C.B.-HOLE

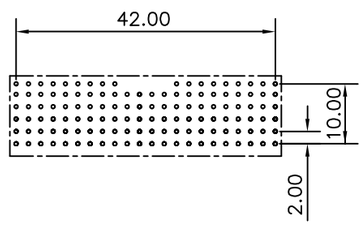

HM2P66PDK3E5- - -

LEAD FREE INDICATOR : LF = LEAD FREE
(DIGIT 15 & 16)

PLATING CODE (DIGIT 13 AND 14)
(REF DRW NO. BS,C , 201844 , 003)

NOTES

1. THIS PRODUCT IS CSA APPROVED.
2. THIS PRODUCT IS UL RECOGNIZED.
3. MEASURED AT THE BOTTOM.
4. MATERIAL CONTACT: PHOSPHORBRONZE
   HOUSING: CREAM WHITE GLASS FILLED POLYESTER UL-94V0
5. CONNECTOR PRINTED WITH P/N AND DATE CODE.
6. FOR ACTUAL CONTACT LOADINGS, SEE LOADING PATTERN MATING SIDE.
7. SHAPE OF CONNECTOR HOUSING CAN ALTER DEPENDING ON PRODUCTION LOCATION
8. THE PRODUCT (LF) MEETS EUROPEAN UNION DIRECTIVES AND OTHER COUNTRY REGULATIONS AS DESCRIBED IN GS-22-008
9. FOR RECOMMENDED PTH DIMENSIONS REFER DRAWING : BS, A , 201572 , 001

CATALOG NO: HM2P66PDK3E5- - - -

ltr	ecn no	dr	date
A	I07-0112	MNI	2007-09-05

mat'l. code	SEE NOTE 4	
surface	ISO 1302	
tolerance	ISO 406 ISO 1101	
tolerances unless otherwise specified	angles 0°±1°	linear .0±0.2, .00±0.1
projection	MM	
scale	–	
dr	MNI K VANDANATH	2007-09-05
engr	BIJU K PAUL	2007-09-05
chr	BIJU K PAUL	2007-09-05
appd	BIJU K PAUL	2007-09-05
product family	MILLIPACS	
title	MPACS 5+2R STR HDR PF CONN TYPE AB 22 POS.	
dwg no	BS, C ,203028, 778	sheet 1 of 1
size	A3	
type	Product Customer Drawing	
sheet index	revision A, sheet 1	

FCIconnect.com
Copyright FCI

form: A3

PDM: Rev:A STATUS:Released Printed: Dec 04, 2007