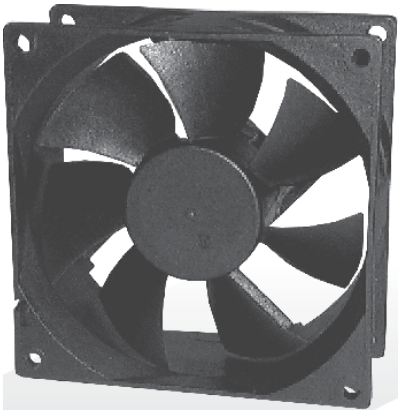

Features:

- Motor: Brushless DC
- Motor Protection: IC
- Bearing Type: Two Ball, Sleeve, or Hydro Dynamic
- Connection: UL 1007 AWG 24, 290mm Wire Leads
- Frame Material: Plastic UL94V-0
- Impeller Material: Plastic UL94V-0
- Operating Temp:
  - Two Ball: -10°C~70°C
  - Sleeve: -10°C~60°C
  - Hydro Dynamic: -10°C~70°C
- Life Expectancy:
  - Two Ball: 70,000 Hours
  - Sleeve: 30,000 Hours
  - Hydro Dynamic: 50,000 Hours

Fan-S Division

RoHS Compliant

Model No.	Volt.	Current	Power	Rated Speed	Maximum AirFlow		Maximum Static Pressure		Noise Level	Weight
	(VDC)	(A)	(W)	(rpm)	(CMM)	(CFM)	(InAq)	(mmAq)	(dB/A)	(g)
FAD1-09225C * AW12	12	0.05	0.60	1600	0.858	30.303	0.034	0.877	19.1	92.0
FAD1-09225C * LW12	12	0.09	1.08	2300	1.245	43.993	0.093	2.370	30.0	92.0
FAD1-09225C * MW12	12	0.14	1.68	2600	1.396	49.357	0.124	3.149	34.5	92.0
FAD1-09225C * HW12	12	0.18	2.16	2900	1.587	56.069	0.146	3.721	37.5	92.0
FAD1-09225C * JW12	12	0.27	3.24	3300	1.752	61.929	0.187	4.749	42.2	92.0
FAD1-09225D * LW12	24	0.08	1.92	2300	1.245	43.993	0.093	2.370	30.0	92.0
FAD1-09225D * MW12	24	0.09	2.16	2600	1.396	49.357	0.124	3.149	34.5	92.0
FAD1-09225D * HW12	24	0.11	2.64	2900	1.587	56.069	0.146	3.721	37.5	92.0
FAD1-09225DBJW12	24	0.16	3.64	3300	1.752	61.929	0.187	4.749	42.2	92.0
FAD1-09225EBHW12	48	0.11	5.28	2900	1.587	56.069	0.146	3.721	37.5	92.0

* Indicates "B" (Ball Bearing), "S" (Sleeve), or "H" (Hydro Dynamic)
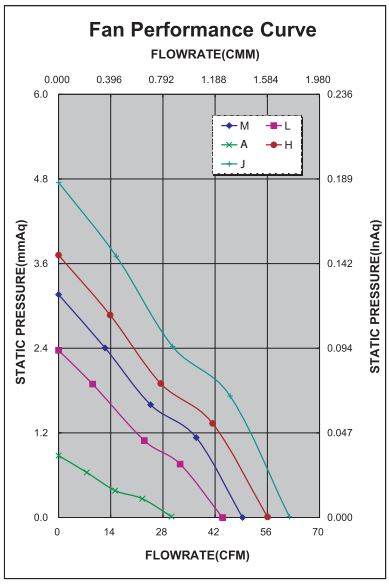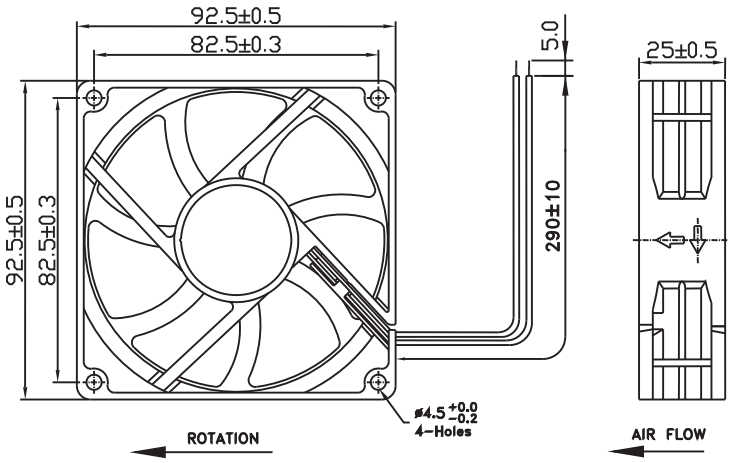
Noise is measured at the distance of one (1) meter from the axis of intake.