THIS DRAWING IS UNPUBLISHED. RELEASED FOR PUBLICATION -.- .
© COPYRIGHT - BY TYCO ELECTRONICS CORPORATION. ALL RIGHTS RESERVED.

LOC	DIST
GP	00

REVISIONS

P	LTR	DESCRIPTION	DATE	DWN	APVD
	B	REVISED PER ECO-06-007841	19JUL06	JDP	MB

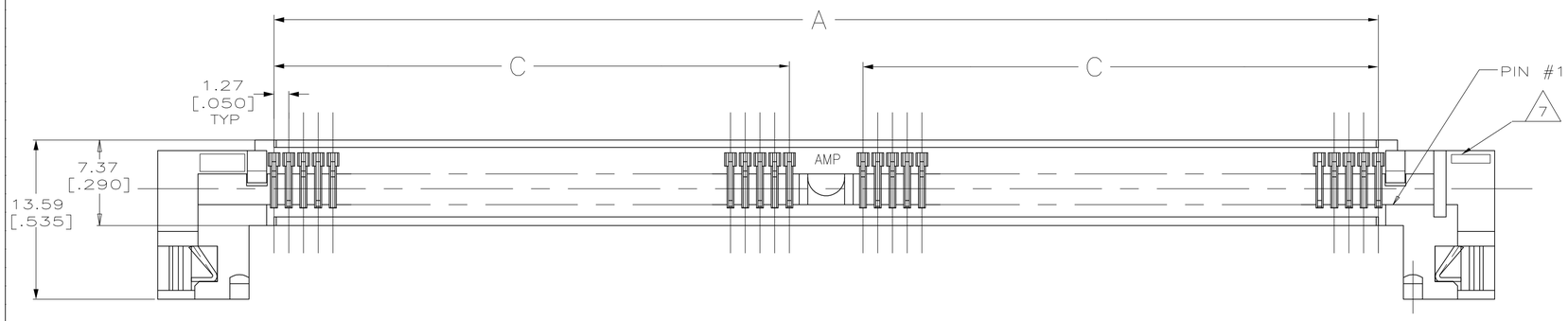

1. HOUSING-MATERIAL : LIQUID-CRYSTAL-POLYMER.
2. CONTACT-MATERIAL : PHOS. BRONZE.
3. LATCH-MATERIAL : STAINLESS STEEL.
4. CONTACT-PLATE: 0.00508[.000200] MIN. MATTE TIN OVER 0.00127 [.000050] MIN NICKEL.
5. IN ADDITION TO THOSE RECOMMENDED "SIMM" P.C. BOARD DIMENSIONS AND TOLERANCES SHOWN, ALL JEDEC SPECIFICATIONS APPLY AS SHOWN ON MO-116, ISSUE A.
6. RECOMMENDED MATING S.I.M.M. TAB METALLURAGY: BASE METAL-COPPER. PLATING TO BE 0.00762[.000300] MIN TIN/LEAD OVER 0.00127[.000050] MIN NICKEL.
7. 'S' IDENTIFIER LOCATED APPROXIMATELY AS SHOWN.
8. DATE CODE INFORMATION (YEAR WEEK), LOCATED APROXIMATELY AS SHOWN ON OPPOSITE SIDE ONLY.

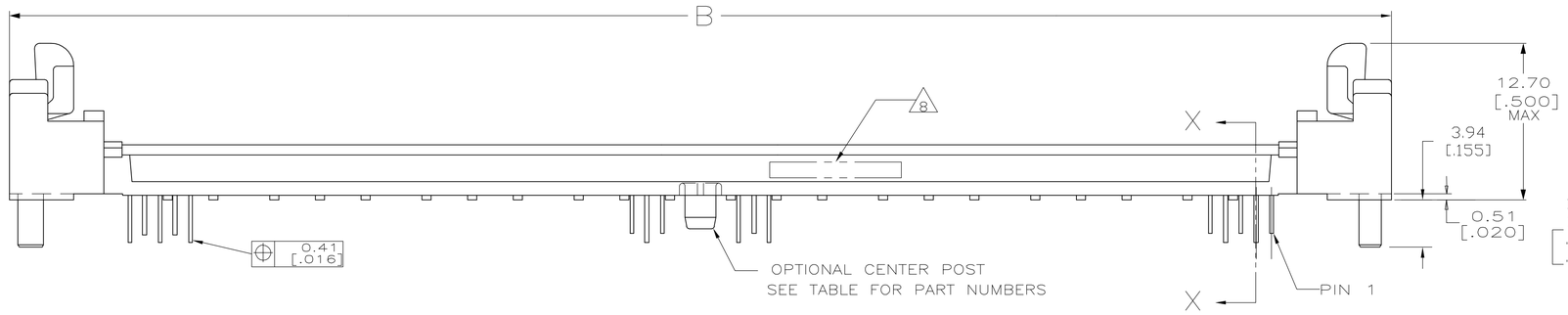

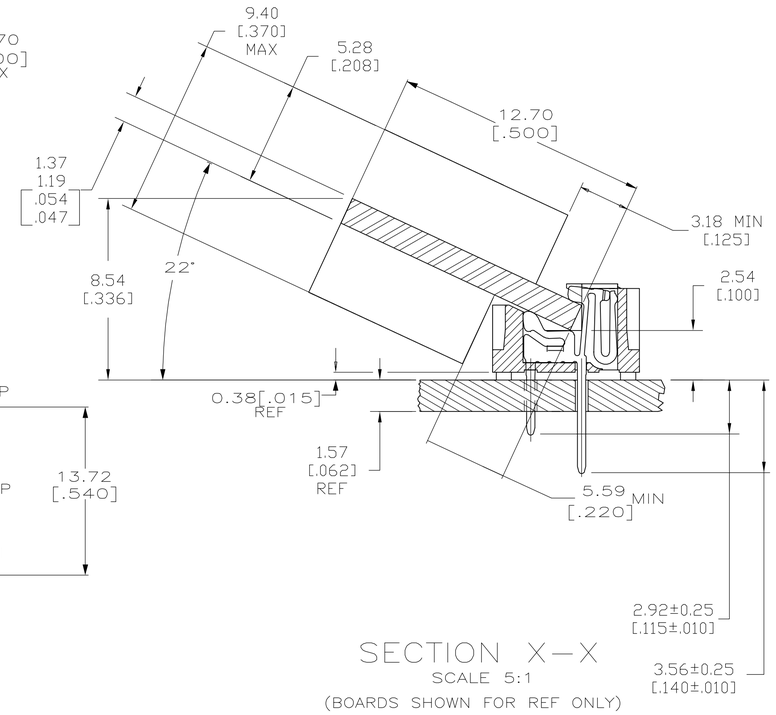

SECTION X-X
SCALE 5:1
(BOARDS SHOWN FOR REF ONLY)

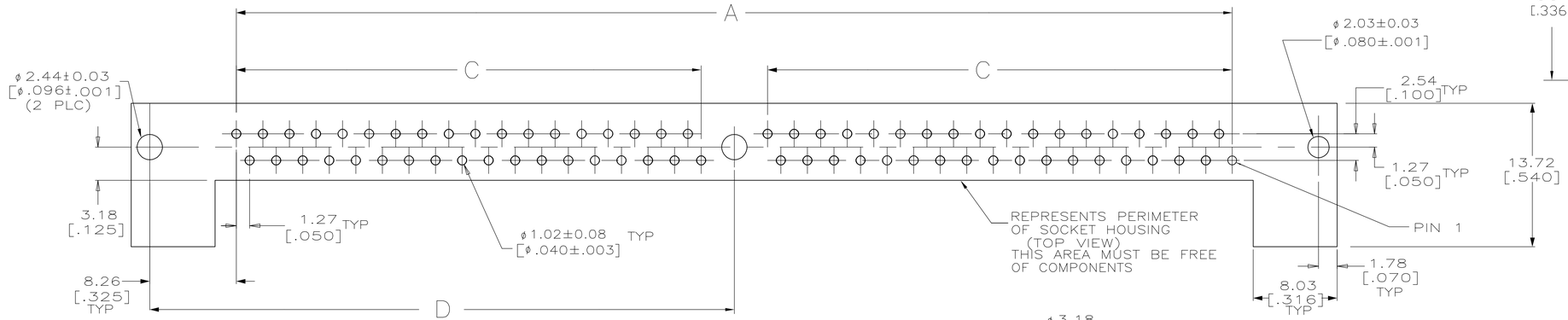

RECOMMENDED P.C. BOARD HOLE PATTERN
SOCKET SIDE

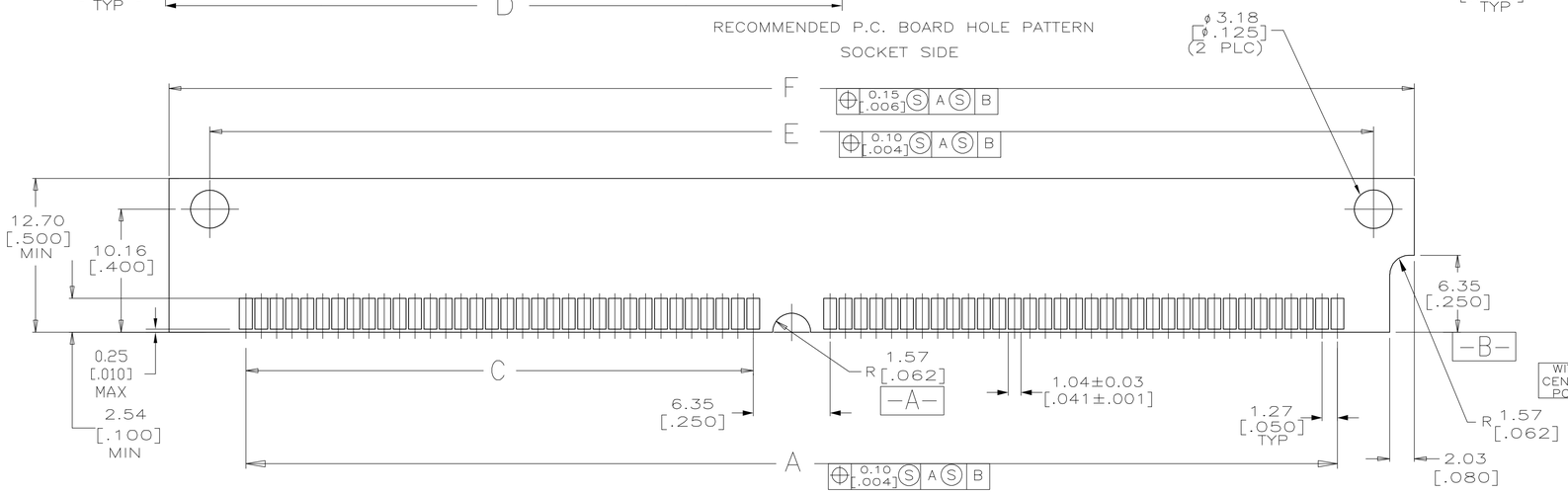

RECOMMENDED "SIMM" P.C. BOARD

WITH CENTER POST	107.95[4.250]	101.19[3.984]	55.88[2.200]	44.45[1.750]	115.32[4.540]	95.25[3.750]	72	5822110-3
	F	E	D	C	B	A	NO. OF POSN	PART NO

THIS DRAWING IS A CONTROLLED DOCUMENT.

DIMENSIONS: mm [INCHES]

TOLERANCES UNLESS OTHERWISE SPECIFIED:
0 PLC ± -
1 PLC ± -
2 PLC ± -
3 PLC ± 0.13[.005]
4 PLC ± -
ANGLES ± -

MATERIAL 1 2 3
FINISH 3 4

DWN B.MCMASTER 06JAN04
CHK M.YEOMANS 06JAN04
APVD M.YEOMANS 06JAN04
PRODUCT SPEC —
APPLICATION SPEC —
WEIGHT —

tyco Electronics
Tyco Electronics Corporation
Harrisburg, PA 17105-3608

NAME
CONNECTOR, MICRO-EDGE, .050,
LP, TIN PL, W/METAL LATCH

SIZE	CAGE CODE	DRAWING NO	RESTRICTED TO
A1	00779	C-5822110	—

CUSTOMER DRAWING | SCALE 4:1 | SHEET 1 OF 1 | REV B

AMP 4805 REV 31MAR2000