DRAWING MADE IN THIRD ANGLE PROJECTION

1426090 ⇔ 1426090

/home/us052641/edmmod

PART NUMBER	REV	FIRST USED	TERMINATOR	FEED TYPE	DESCRIPTION
1426090-1	B	–	LEADMAKER	MECH POST FEED	CUTS CARRIER
1426090-2	B	–	BENCH	MECH PRE FEED	CUTS CARRIER
1426090-6	B	–	LEADMAKER	MECH POST FEED	CONTINUOUS CARRIER
7-1426090-1	B	–	LEADMAKER	MECH POST FEED	-1 AND SPARE PARTS
7-1426090-2	B	–	BENCH	MECH PRE FEED	-2 AND SPARE PARTS
7-1426090-6	B	–	LEADMAKER	MECH POST FEED	-6 AND SPARE PARTS
7-1426090-7	A	–	–	–	SPARE PARTS KIT

CRIMP DATA (NON-AMP TERMINAL-CUST SPEC)

TERMINAL NAME: MTA-C 100¢ CRIMP CONTACT (ADAM TECHNOLOGIES)

CRIMP	SIZE	TYPE	RANGE
WIRE	1.27 [.050 IN]	F	24 AWG
INSUL	1.78 [.070 IN]	F	△4 1.20 [.047 IN]

WIRE STRIP LENGTH 2.50-3.30 [.098-.130 IN]

APPL INSTRUCTION 408-8322

TERMINAL – –
APPL SPEC 114-3118 –

FEED 5.08 [.200 IN]

TERMINALS APPLIED

TERM MANU P/N	AMP P/N	–	–	–
MTA-C-R	286887-1	–	–	–
–	–	–	–	–
–	–	–	–	–
–	–	–	–	–
–	–	–	–	–
–	–	–	–	–
–	–	–	–	–

WIRE SIZE mm² AWG	CRIMP HEIGHT	PIN PN & LENGTH [IN]
24 AWG	0.80 ±0.05 [.031 ±.002 IN]	4-354779-6 [.3220]
–	–	–
–	–	–
–	–	–
–	–	–
–	–	–
–	–	–
–	–	–
–	–	–
–	–	–
–	–	–
–	–	–
–	–	–
–	–	–
–	–	–
–	–	–

1. RECOMMENDED SPARE PARTS.
2. GREASE RAM, CAM, CAM FOLLOWER AND FEED ROD LIGHTLY.
3. LUBRICATE DAILY PER THE APPLICATOR INSTRUCTION SHEET SUPPLIED WITH THE APPLICATOR.
4. 1.5mm NOMINAL INSULATION CRIMP HEIGHT.
5. CRIMP DATA QUOTED ON THIS LOG IS AS SPECIFIED BY CUSTOMER AND NOT AS CALCULATED BY AMP.

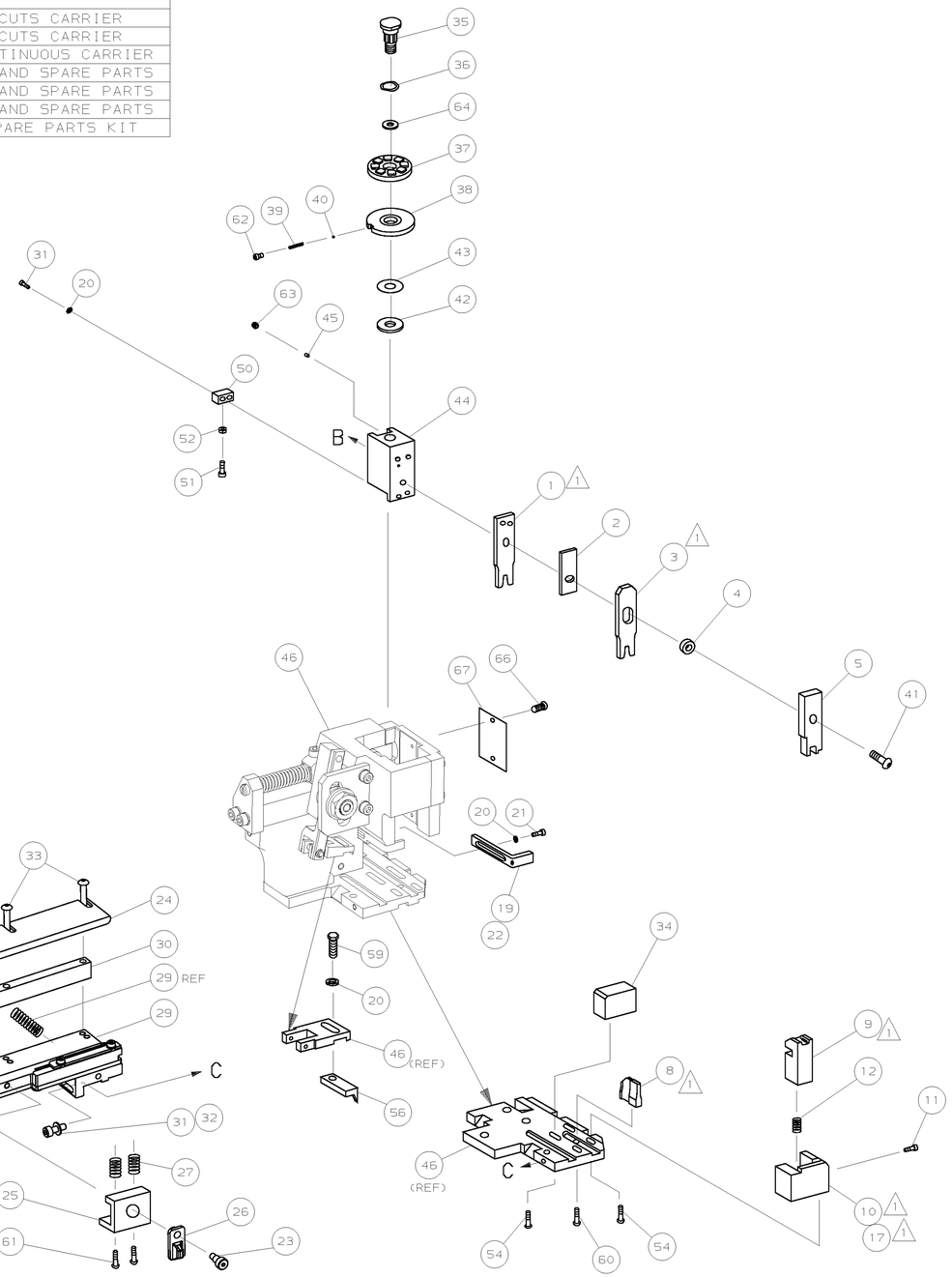

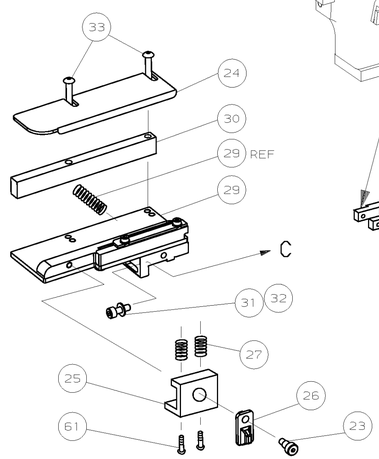

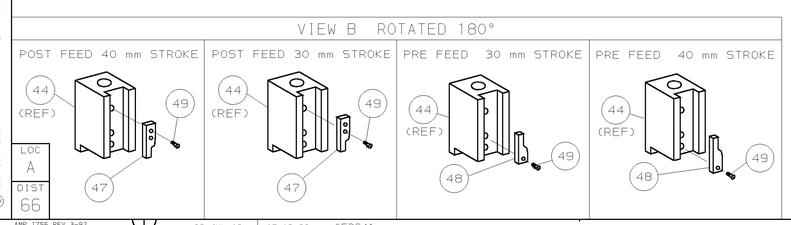

FENCE SET-UP DIM

									73
–	1	1	1	1	1	1	1426090	PRINT, APPLICATOR LOG SHEET	72
–	1	1	1	1	1	1	1338705-1	DOCUMENTATION PACKAGE	71
									70
									69
									68
–	1	1	1	1	1	1	461264-1	PLATE, IDENTIFICATION	67
–	2	2	2	2	2	2	21017-2	SCR,DRIVE(#2x.19)ID PLATE	66
									65
–	1	1	1	1	1	1	986950-1	WASHER, FLAT PRECISION	64
–	1	1	1	1	1	1	3-18031-0	SCR,SKT SET(M6X6)RAM	63
–	1	1	1	1	1	1	18023-9	SCR,SHC(M4X6)INS DISC	62
–	2	2	2	2	2	2	1-18024-5	SCR,BHC(M5X25)DRAG	61
–	1	1	1	1	1	1	18024-7	SCR,BHC(M4X10)ANVIL	60
–	1	1	1	1	1	1	5-18022-2	SCR,HEX(M4X8)FEED FINGER	59
									58
									57
–	1	1	1	1	1	1	1338685-1	PAWL, FEED	56
									55
–	4	4	4	4	4	4	18024-8	SCR,BHC(M4x12)SHEAR HOLDER	54
									53
–	1	1	1	1	1	1	18030-1	NUT,HEX(M3)HOLD DOWN	52
–	1	1	1	1	1	1	811242-5	BUMPER, HOLDDOWN	51
–	1	1	1	1	1	1	690753-2	SPACER, TONKER	50
–	1	1	1	1	1	1	18024-3	SCR,BHC(M3X10)CAM	49
–	–	1	–	–	1	–	1338675-1	CAM, PRE FEED 30 & 40 mm ST	48
–	1	–	1	1	–	1	1338676-1	CAM, POST FEED 30 & 40 mm ST	47
–	1	1	1	1	1	1	1320999-3	APPLICATOR BASIC SUBASSY	46
–	1	1	1	1	1	1	690191-1	PLUG, NYLON	45
–	1	1	1	1	1	1	1338660-1	RAM	44
–	1	1	1	1	1	1	690125-1	WASHER, LAMINATED	43
–	1	1	1	1	1	1	690124-1	WASHER, RAM	42
–	1	1	1	1	1	1	2-18024-6	SCR,BHC(M8X25)RAM	41
–	1	1	1	1	1	1	23241-1	BALL, STEEL	40
–	1	1	1	1	1	1	2-22278-7	SPRING, COMPRESSION	39
–	1	1	1	1	1	1	1320922-1	DISC, INSULATION	38
–	1	1	1	1	1	1	354777-1	WIRE DISC, PLASTIC	37
–	1	1	1	1	1	1	22480-5	WASHER, SPRING	36
–	1	1	1	1	1	1	690212-1	POST, RAM	35
–	1	1	1	1	1	1	1320934-1	SUPPORT, TERMINAL	34
–	2	2	2	2	2	2	1-18024-0	SCR,BHC(M4X20)STRIP GUIDE	33
–	1	1	1	1	1	1	18027-2	WASHER, FLAT(M4)	32
–	3	3	3	3	3	3	1-18023-2	SCR,SKT CAP(M4X12)MOUNT BLOCK	31
–	1	1	1	1	1	1	1320908-9	SPACER, STRIP GUIDE	30
–	1	1	1	1	1	1	1633073-1	STRIP GUIDE PLATE ASSY	29
									28
–	2	2	2	2	2	2	1-22284-0	SPRING, DRAG	27
–	1	1	1	1	1	1	356835-1	LEVER, DRAG RELEASE	26
–	1	1	1	1	1	1	240792-1	DRAG, TERMINAL	25
–	1	1	1	1	1	1	1320928-1	PLATE, STRIP GUIDE	24
–	1	1	1	1	1	1	980371-4	SCR,SHC SHLD	23
–	1	–	1	1	–	1	690472-2	STRIPPER	22
–	1	1	1	1	1	1	1-18023-1	SCR,SHC(M4X10)STRIPPER	21
–	4	4	4	4	4	4	18025-2	WASHER,LOCK(M4)STRIPPER	20
–	–	1	–	–	1	–	690472-1	STRIPPER	19
									18
△1 –	1	–	–	1	–	–	1338684-1	HOLDER, SHEAR, FRONT (NO-CUT)	17
									16
									15
									14
									13
–	1	1	1	1	1	1	5-22280-0	SPRING, SHEAR	12
–	1	1	1	1	1	1	356885-4	STOP, SHEAR	11
△1 –	–	1	1	–	1	1	1320921-1	HOLDER, SHEAR, FRONT (CUT)	10
△1 –	1	1	1	1	1	1	462006-1	SHEAR, FLOAT (FRONT)	9
△1 1	2	2	2	1	1	1	1333225-5	ANVIL	8
									7
									6
–	1	1	1	1	1	1	2-455889-0	DEPRESSOR, SHEAR (FRONT)	5
–	1	1	1	1	1	1	238011-6	SPACER, BLOCK CRIMPER	4
△1 1	2	2	2	1	1	1	4-683453-8	CRIMPER, INSULATION	3
–	1	1	1	1	1	1	455888-6	SPACER, CRIMPER	2
△1 1	2	2	2	1	1	1	2-568176-5	CRIMPER, WIRE	1
-77	-76	-72	-71	-6	-2	-1	PART NO	DESCRIPTION	ITEM NO

← REVISION OF EACH ASSY NO (WHEN BLANK, USE DWG REVISION)

QTY REQD PER ASSY — PARTS LIST

P	F	LTR	REVISION RECORD	APP	DATE
		B	SEE ECN 0150-0755-03	CMR	JUL03
		A	SEE ECN 015A-0509-00	MC	NOV00

DIMENSIONS: mm [INCHES]
DO NOT SCALE PRINT.
TOLERANCES UNLESS OTHERWISE SPECIFIED:
1 PLC DEC ±0.5 [.02 IN]
2 PLC DEC ±-
3 PLC DEC ±-
ANGLES ± -
SURF TEXTURE: √
REMOVE BURRS, BREAK SHARP EDGES R0.38 MAX

MATL – HT TR – FIN –

DR 19SEP00 M.CLIFFORD APP 19SEP00 F.BACKHURST
CHK 03-11-00 L.LOFTHOUSE REL 03-11-00 M.CLIFFORD

AMP Incorporated Harrisburg, PA 17105-3608

NAME SIDE FEED HD-I APPLICATOR — MACHINE REF HD-I APPL

SCALE – D DWG NO 1426090 SHEET 1 OF 1 REV B

CAGE CODE 00779 — CUSTOMER AND ASSEMBLY DRAWING — RESTRICTED TO –

LAYOUT L1426090 — SET UP GAGE 458637-3

THIS DRAWING IS A CONTROLLED DOCUMENT.
THIS DRAWING IS UNPUBLISHED. © COPYRIGHT 2000 BY AMP INCORPORATED. RELEASED FOR PUBLICATION .2000 . ALL RIGHTS RESERVED.