PART NO.	ENG. NO.
02-09-1142	1433-A(P901)
02-09-1144	1433-A(P901)L
02-09-5146	1433-A(P550)
02-09-5147	1433-A(P550)L
02-09-5165	1433-A(P563)

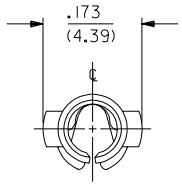

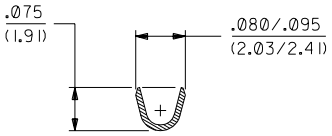

SECT. "A-A"

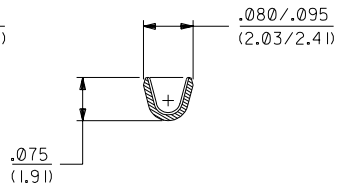

SECT. "B-B"

LEGEND

1433-A(****)*

- FORM: BLANK=CHAIN, L=LOOSE
- FINISH CODE
- P=PREPLATE, BLANK=POSTPLATE

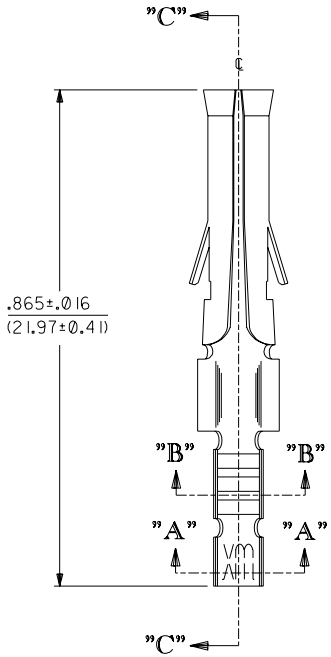

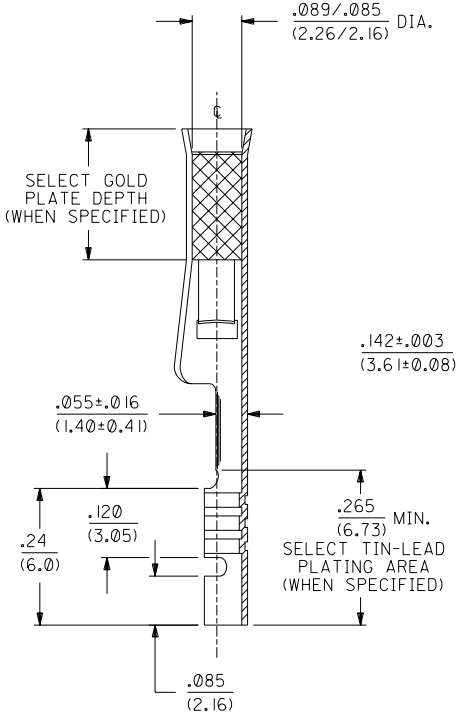

SECT. "C-C"

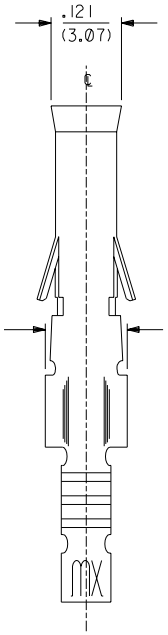

NOTES:

1. TERMINAL FOR USE WITH .093/(2.36) SERIES HOUSINGS AND WILL ACCEPT 24 THRU 30 AWG WIRE.
2. INSERTION FORCE: 3.5 LBS. MAX. WHEN TERMINAL IS INSERTED INTO AN .093 SERIES HOUSING.
3. CONTACT RETENTION: 20 LBS. MIN.
4. THIS PART CONFORMS TO PROD. SPEC. 02-09.

FINISH CODES:

901 HOT TIN DIP .000020/(0.00051) MIN.

903 HOT TIN-LEAD DIP .000050/(0.00127) MIN.

550 SELECT GOLD PLATE .000015/(0.00038) MIN. IN CONTACT AREA, OVER .000030/(0.00076) MIN. NICKEL OVERALL WITH .000010/(0.00025) MAX. GOLD FLASH OVERALL.

563 SELECT GOLD PLATE .000030/(0.00076) MIN. IN CONTACT AREA, SELECT TIN-LEAD PLATING .000100/(0.00254) MIN. IN CRIMP AREA OVER .000050/(0.00127) NICKEL OVERALL.

MATERIAL:

CARTRIDGE BRASS, ALLOY #C26000, .010/(0.25) THICK, SPRING TEMPER

LTR.	REVISIONS	MFG.	SH.	REV.
AA	REVISE PER ECR U5 0799 GK 2/13/95 RW			
Z	FINAL RELEASE ECR U1 0454 GK 2/20/91 RW			

REVISE ONLY ON CAD SYSTEM

DIMENSIONS SHOWN (METRIC) INCH

UNLESS OTHERWISE SPECIFIED TOLERANCES: ANGULAR ± 1/2°

	INCH	METRIC
3 PLACE	± .010	---
2 PLACE	± .014	± 0.25
1 PLACE	---	± 0.36

DRAFT WHERE APPLICABLE MUST REMAIN WITHIN DIMENSIONS

TITLE: CRIMP TERMINAL, FEMALE .093/(2.36) DIA. FOR 24 THRU 30 AWG WIRE

molex MOLEX INCORPORATED LISLE, ILL. 60532 U.S.A.

SHEET NO. 1 | DATE 2/20/91

PART NO. SEE CHART | DRWG. NO. SD-1433-*

DRWG. BY GK | CHK'D. BY RW | APP'D. BY GWF | SCALE 6 : 1

FILE NAME S1433X1 DGN

THIS DRAWING CONTAINS INFORMATION THAT IS PROPRIETARY TO MOLEX INC. AND SHOULD NOT BE USED WITHOUT WRITTEN PERMISSION.

DIV. CP | SIZE C