GKCWBM-P04WBC0-000L

amc_hd, type_gk

General information

Part number	GKCWBM-P04WBC0-000L
Termination	solder
Size	00
Locking principle	break
Coding	b_key_amc
Cable Diameter	cable_amchd_C

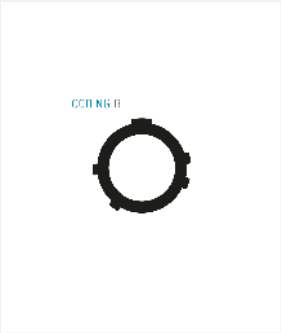

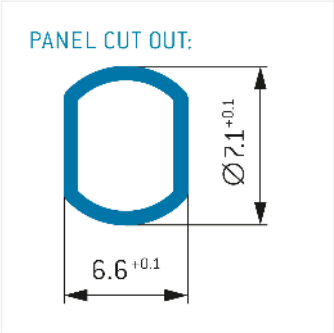

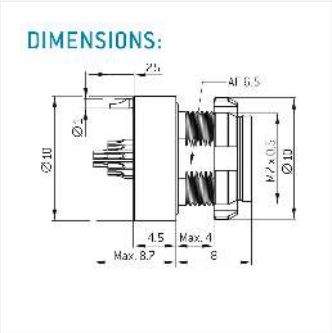

Contact insert description

Number of contacts	4
Contact type	sockets
Contact diameter	03mm
Insulator material	peek
Wire cross section	28_awg
Termination	solder

reverse_gender_on_request

Technical information

Nominal current single contact	01_a	iec_60512_5_2
Nominal current insert	1 A	vde_0298_4
Test voltage	09_kv_dc	eia_364_20f

safety_text

Mechanical and environmental data

Degree of protection*	ipsk8_ip6k9k
Operating temperature	51_125_c
Mating cycles	5000

mated

Material and surface treatments

Housing	ruthenium
Contact	cu_alloy_gold

safety_text_2
ul_text
illustrative_text