Copyright FCI.

FCIconnect.com

PRODUCT NO.
10116976-1211FLF
10116976-1211ALF

SENSOR TYPE:
F: BLADE CONTACTS NORMALLY CLOSED
A: BLADE CONTACTS NORMALLY OPEN

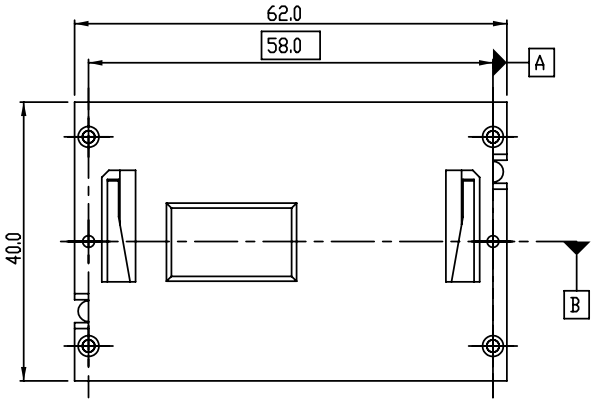

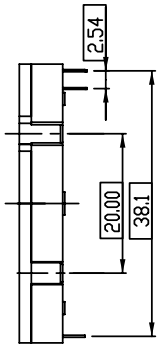

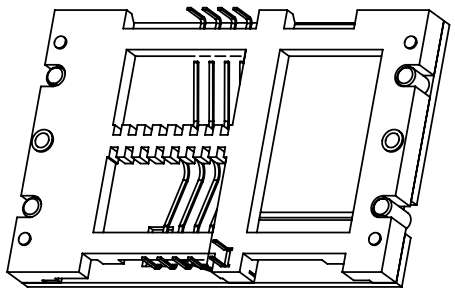

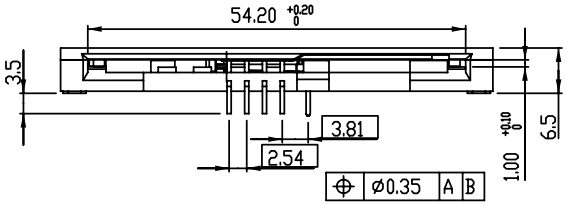

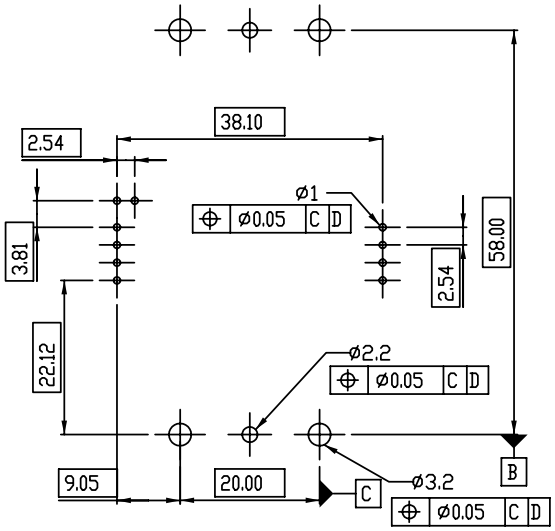

NOTES:
1. MATERIAL:
   CONTACT:PHOSPHOR BRONZE
   BASE: UL 94V-0 THERMOPLASTIC
   COVER:UL 94V-0 THERMOPLASTIC
2. PLATING:
   CONTACT AREA:0.38um Au
   SOLDER TAIL AREA:3um MATTE PURE
   1.25um NICKEL UNDERPLATE OVER ALL SURFACES
3. THE HOUSING WILL WITHSTAND EXPOSURE TO 260°C
   PEAK TEMPERATURE FOR 10 SECONDS IN A WAVE SOLDER
   APPLICATION WITH A 1.6mm MIN. THCK CIRCUIT BOARD
4. PRODCUT SPEC:GS-12-316
   PACKAGE SPEC:GS-14-976

mat'l. code	surface ISO 1302	tolerance ISO 406 ISO 1101	projection	product family
				SMART CARD

ltr	ecn no	dr	date
A	N11-0093	SH	2011-03-28
B	ECN-ELX-N-011638	SH	2012-05-16

tolerances unless otherwise specified
angle: 0°±2°
linear: 0.X±0.3; 0.00±0.13; 0.000±0.050
mm
scale 4.000

title: SMART CARD CONNECTOR

dr	SH MIAO	2010-12-16
engr	SH MIAO	2010-12-16
chr	RICK BIAN	2010-12-16
appd	RICK BIAN	2010-12-16

dwg no: 10116976 | sheet 1 of 1 | size A4
type: Product Customer Drawing

sheet index	revision B
	sheet 1