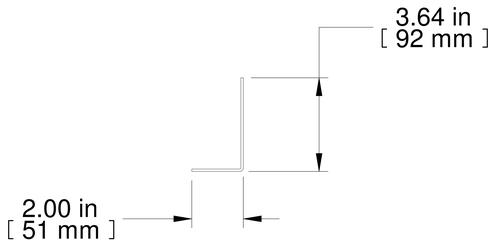

TOP VIEW

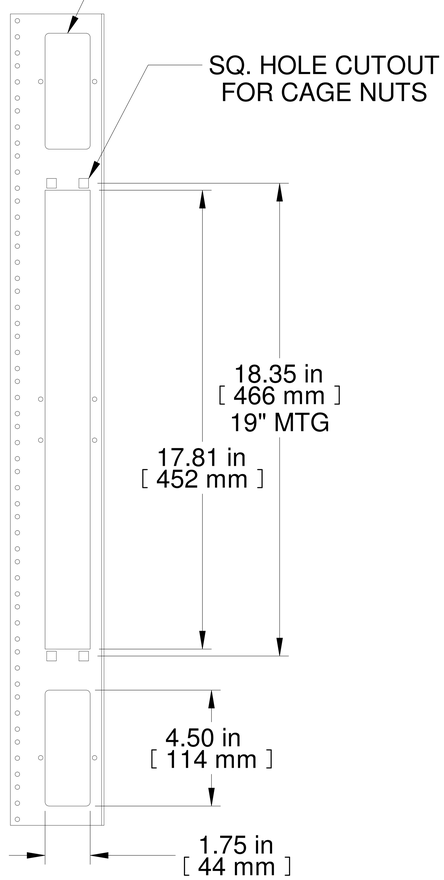

L.S. VIEW

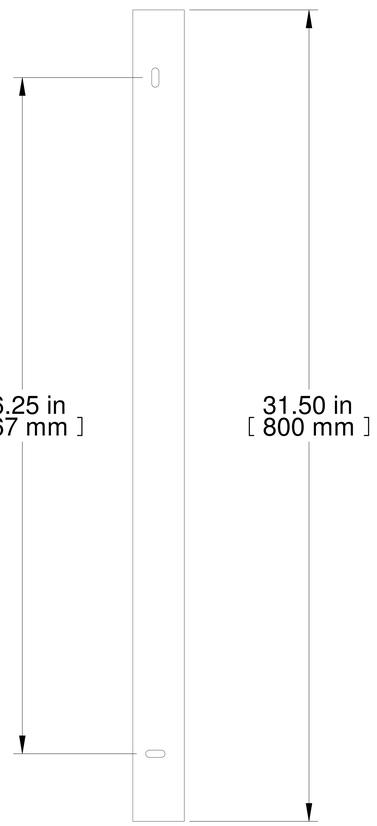

FRONT VIEW

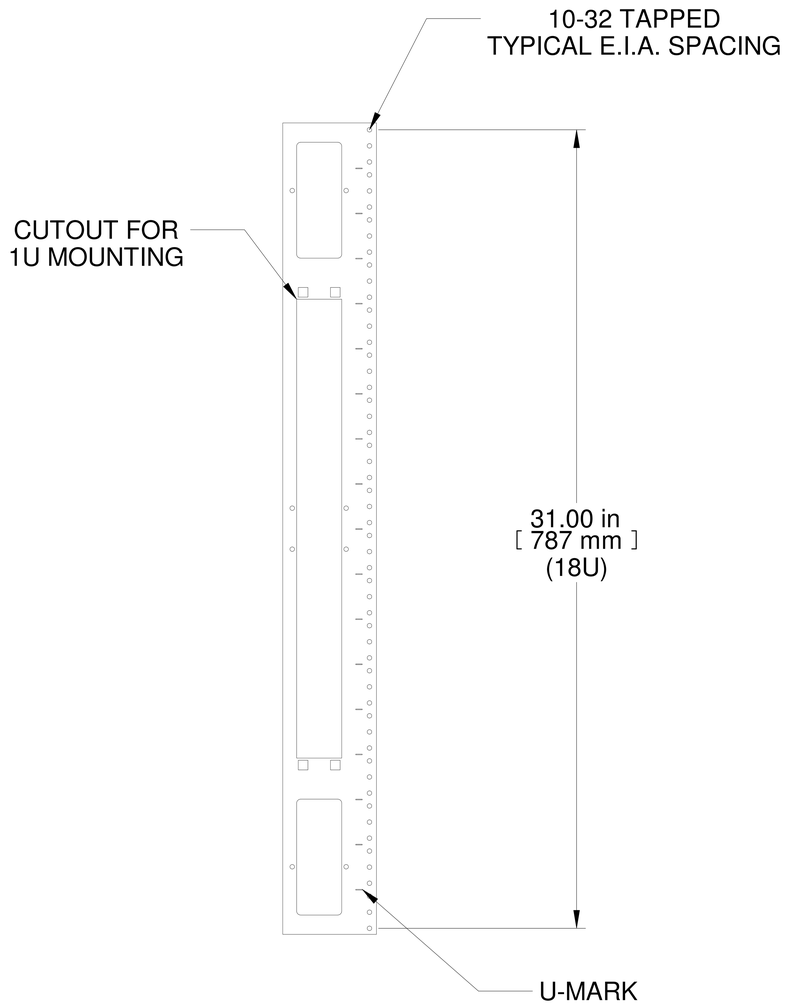

R.S. VIEW

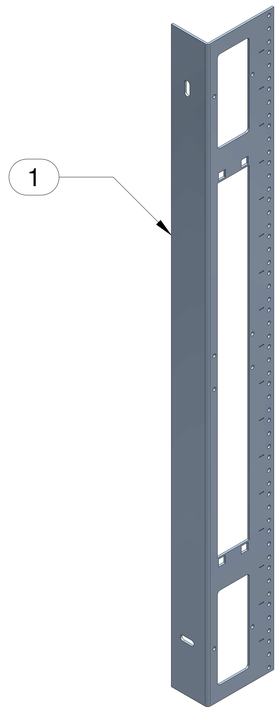

ISOMETRIC
(SOLD AS PAIR)

BOTTOM VIEW

Item Number	Title	Quantity
1	HWC RAIL - TAPPED	2

PART NUMBERS

HWC3018UTR	PAINTED BLACK THIN FILM

NOTES

Sold in Pairs
Equipment Mounting Hardware Not Included
See Hammond Website for More Accessories

Français

Pour tous les détails sur nos produits,
svp veuillez consulter notre site www.hammondmfg.com

Data subject to change without notice. Isometric drawing not to scale.
Les données sont sujettes à changement sans préavis.

HAMMOND MANUFACTURING®

www.hammondmfg.com

PART NO. **HWC3018UTR**