LOADING PATTERN MATING SIDE

f	0	0	0	0	0	0	0	0	0	0	0				0	0	0	0	0	0	0	0	0	0
e	5	5	5	5	5	5	5	5	5	5	5				4	5	5	5	5	5	5	5	5	5
d	5	5	5	5	5	5	5	5	5	5	5				4	5	5	5	5	5	5	5	5	5
c	5	5	5	5	5	5	5	5	5	5	5				4	5	5	5	5	5	5	5	5	5
b	5	5	5	5	5	5	5	5	5	5	5				4	5	5	5	5	5	5	5	5	5
a	5	5	5	5	5	5	5	5	5	5	5				4	5	5	5	5	5	5	5	5	5
z	0	0	0	0	0	0	0	0	0	0	0				0	0	0	0	0	0	0	0	0	0
POS	01				05					10					15					20				25

LOADED CONNECTOR ASSEMBLY
(FOR EXAMPLE)

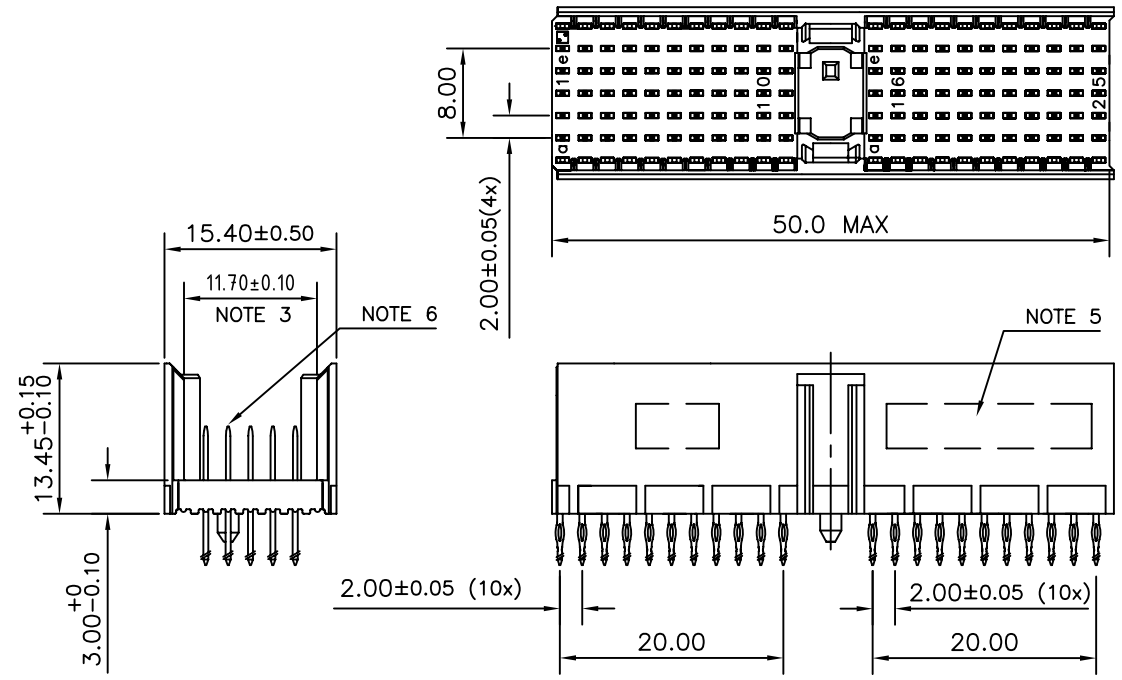

CONTACT OVERVIEW

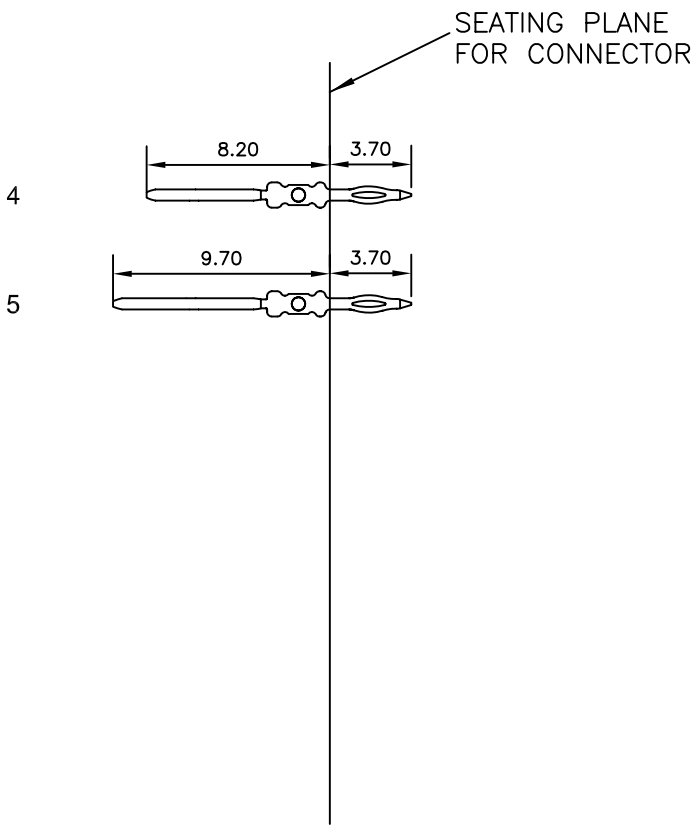

LAY-OUT P.C.B.-HOLE

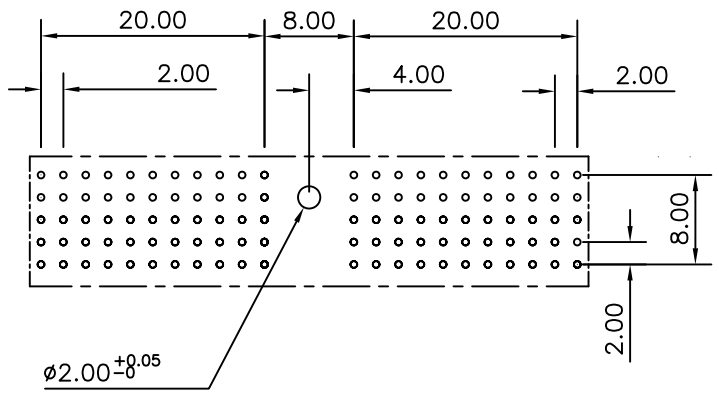

HM2P07PDL3R0----

LEAD FREE INDICATOR : LF = LEAD FREE
(DIGIT 15 & 16)

PLATING CODE (DIGIT 13 AND 14)
(REF DRW NO. BS,C , 201844 , 003)

NOTES

1. THIS PRODUCT IS CSA APPROVED.
2. THIS PRODUCT IS UL RECOGNIZED.
3. MEASURED AT THE BOTTOM.
4. MATERIAL CONTACT: PHOSPHORBRONZE
   HOUSING: CREAM WHITE GLASS FILLED POLYESTER UL-94V0
5. CONNECTOR PRINTED WITH P/N AND DATE CODE.
6. FOR ACTUAL CONTACT LOADINGS, SEE LOADING PATTERN MATING SIDE.
7. SHAPE OF CONNECTOR HOUSING CAN ALTER DEPENDING ON PRODUCTION LOCATION
8. THE PRODUCT (LF) MEETS EUROPEAN UNION DIRECTIVES AND OTHER COUNTRY REGULATIONS AS DESCRIBED IN GS-22-008
9. FOR RECOMMENDED PTH DIMENSIONS REFER DRAWING : BS, A , 201572 , 001

CATALOG NO: HM2P07PDL3R0----

mat'l. code SEE NOTE 4				surface ISO 1302		tolerance ISO 406 ISO 1101	projection
ltr	ecn no	dr	date	tolerances unless otherwise specified			
A	109-0073	GT	2009-05-11	angles	linear	.0±0.2	MM
						.00±0.1	
				0°±1°			scale –
				dr	GEORGE THOMAS	2009-05-11	
				engr	ALEX BABU	2009-05-11	
				chr	ALEX BABU	2009-05-11	
				appd	ALEX BABU	2009-05-11	
sheet index	revision sheet	A 1					

product family: MILLIPACS

title: MPACS 5+2R STR HDR PF CONN TYPE A

dwg no: BS, C ,203028,859 — sheet 1 of 1 — size A3

type: Product Customer Drawing

FCIconnect.com
Copyright FCI
PDM: Rev:A STATUS: Released Printed: May 26, 2009
form: A3