THIS DRAWING IS UNPUBLISHED. RELEASED FOR PUBLICATION -.- .
© COPYRIGHT - By - ALL RIGHTS RESERVED.

LOC	DIST
AA	00

REVISIONS

P	LTR	DESCRIPTION	DATE	DWN	APVD
	C1	REVISED PER ECO-11-005033	23MAR11	RK	HMR

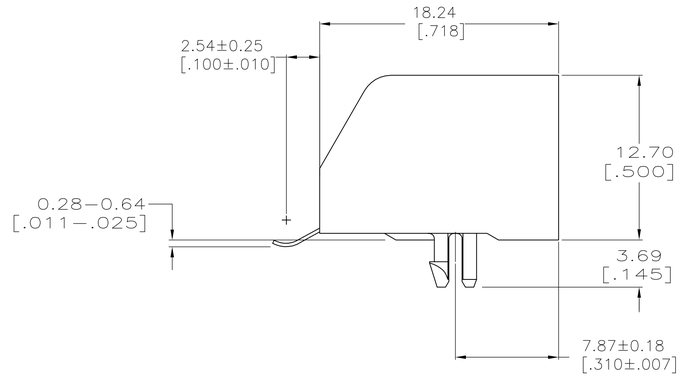

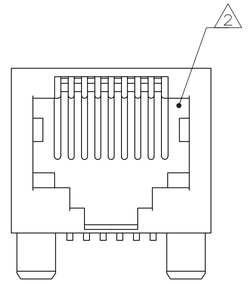

1. MATERIAL: HOUSING – HTN MOLDING COMPOUND, 94 VO, COLOR: BLACK.
   TERMINAL – 0.36 [.014] THICK PHOS–BRONZE PLATE WITH 1.27μm [.000050] MINIMUM THICK HARD GOLD IN LOCALIZED GOLD PLATE AREA AND 3.81μm [.000150] MINIMUM THICK MATTE TIN IN SOLDER AREA OVER 1.27μm [.000050] MINIMUM THICK NICKEL UNDERPLATE.

2. CAVITY CONFORMS TO FCC RULES AND REGULATIONS, PART 68, SUBPART F.

3. ALL DIMENSIONS SHOWN ARE MAXIMUM UNLESS OTHERWISE SPECIFIED AND ARE PRIOR TO SURFACE MOUNT PROCESSING.

4. SNAP–IN RETENTION FEATURE ACCOMMODATES 1.45–1.70 [.062±.005] THICK PRINTED CIRCUIT BOARD.

5. ASSEMBLIES ARE PACKAGED 36 IN A TUBE.

6. ASSEMBLIES ARE PACKAGED IN TRAYS.

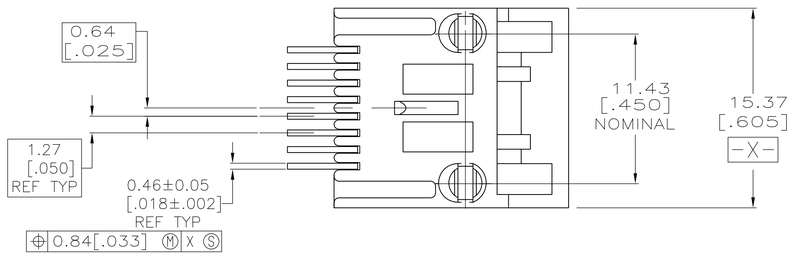

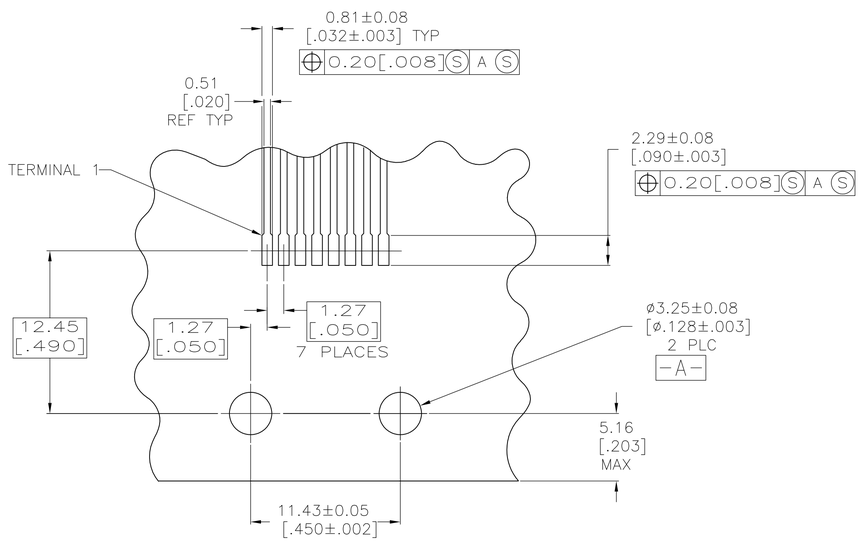

RECOMMENDED PRINTED CIRCUIT BOARD LAYOUT
COMPONENT SIDE

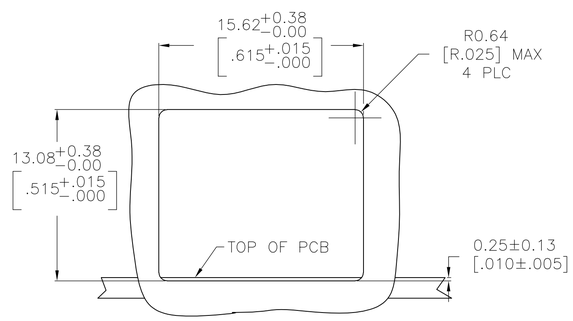

RECOMMENDED
PANEL CUTOUT

5	5555764–3
6	5555764–1
PACKAGED	PART NO

THIS DRAWING IS A CONTROLLED DOCUMENT.

DIMENSIONS: mm[INCHES]

TOLERANCES UNLESS OTHERWISE SPECIFIED:
0 PLC ± –
1 PLC ± –
2 PLC ± –
3 PLC ± –
4 PLC ± –
ANGLES ± –

MATERIAL: SEE NOTE 1
FINISH: SEE NOTE 1

DWN G. ATTADIA – DOCK5 09JUN2005
CHK J. WESTMAN 09JUN2005
APVD S. FLICKINGER 09JUN2005
PRODUCT SPEC 108–1163
APPLICATION SPEC 114–6040
WEIGHT –

TE Connectivity

NAME: MODULAR JACK ASSEMBLY, 8 POSITION, LOW PROFILE, RIGHT ANGLE, SURFACE MOUNT

SIZE	CAGE CODE	DRAWING NO	RESTRICTED TO
A1	00779	C–5555764	–

CUSTOMER DRAWING | SCALE 4:1 | SHEET 1 OF 1 | REV C1

4805 (3/11)