PRODUCT NUMBER

71978–YXXLF

RoHS COMPATIBLE, SEE NOTE 12

LATCHING
0= WITHOUT LATCH
1= STANDARD LATCH
2= LOW PROFILE LATCH

TOTAL NUMBER OF POSITIONS	
06	26
08	34
10	40
14	44
16	50
18	60
20	64

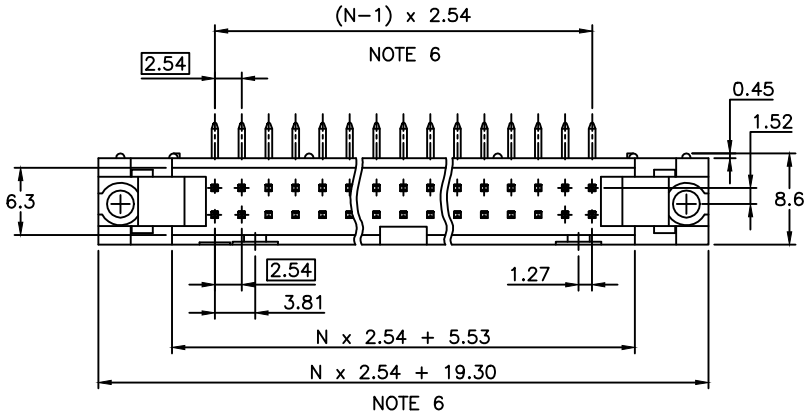

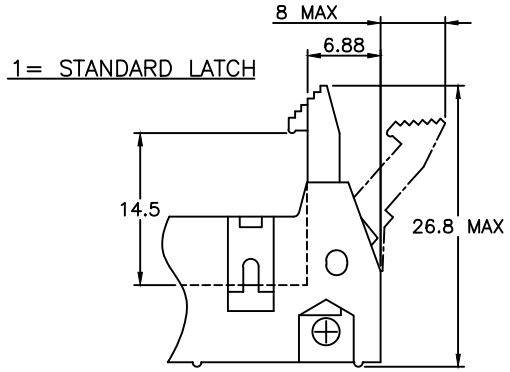

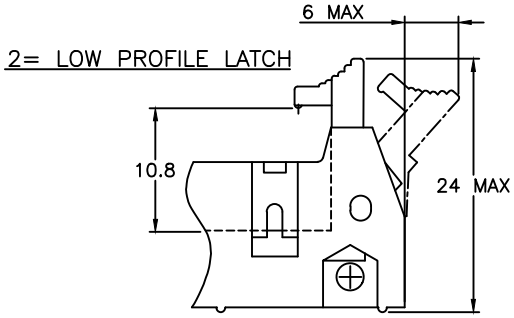

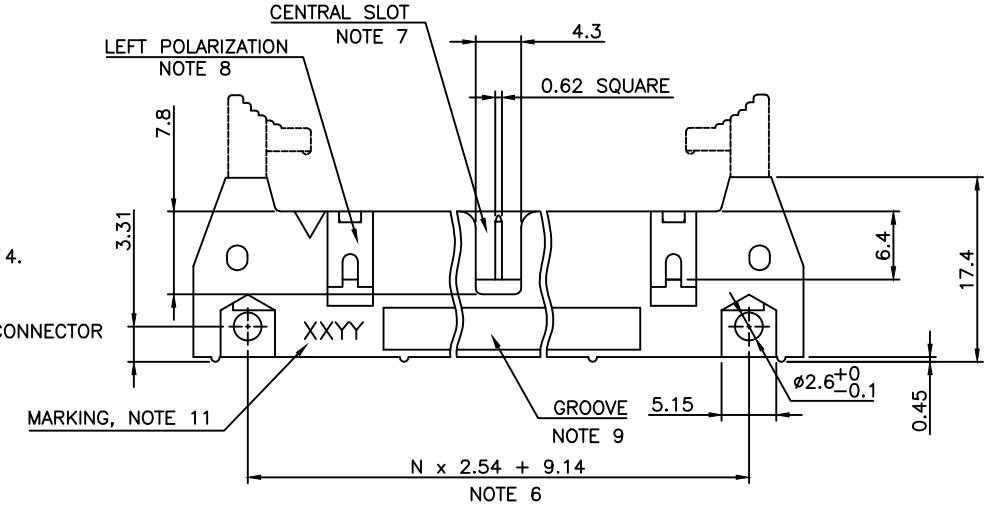

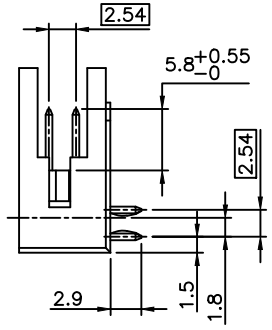

NOTES:

1 – HOUSING MAT'L : GLASS FILLED THERMOPLASTIC. UL94V–0 COLOR: BLUE

2 – PIN MATERIAL : PHOSPHOR BRONZE

3 – 0.76µm GOLD/GXT (PdNi WITH GOLD FLASH) ON CONTACT AREA
2µm MIN MATTE TIN ON TAIL.
UNDERPLATE : 1.27µm Ni MIN

4 – PRODUCT PACKED IN TUBES

5 – 40N MIN LATCH RETENTION FORCE AT FIRST EXTRACTION

6 – TO DETERMINE DIMENSIONS :
N = NUMBER OF POSITIONS PER ROW
EXAMPLE : 8 POS N x 2.54 = 20.32mm

7 – NO CENTRAL SLOT ON POSITIONS 6 & 8

8 – NO LEFT POLARIZATION ON POSITIONS 06, 08, 10, 14.

9 – NO GROOVE ON POSITIONS 06, 08, 10, 14, 30, 34

10 – RETENTION LEGS LOCATED IN THE CENTER OF THE CONNECTOR

11 – MARKING : XX = YEAR CODE
YY = WEEK NUMBER

12 – RoHS COMPATIBLE PRODUCT SPECIFICATIONS

a – PLATING:
– "LF" MEANS THE PRODUCT IS LEAD–FREE, 2µm MINIMUM MATTE TIN OVER 1.27µm MINIMUM NICKEL UNDERPLATE.

b – MANUFACTURING PROCESS COMPATIBILITY
– THE HOUSING WILL WITHSTAND EXPOSURE TO 260°C ±5°C SOLDER BATH TEMPERATURE FOR 5 SECONDS IN A WAVE SOLDER APPLICATION WITH A 1.6mm MIN THICK CIRCUIT BOARD.

c – LABELING:
– MEETS PACKAGING SPECS AS PER GS–14–920

d – LEGAL STATEMENT: SEE GS–47–0004

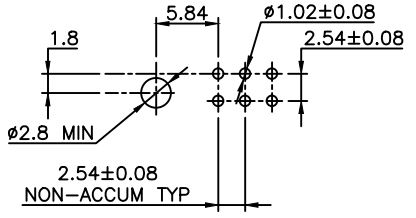

RECOMMENDED HOLE PATTERN

ltr	ecn no	dr	date
H	B–16860	LMU	14.01.27
J	B–19093	LMU	14.10.16
D	F04–0389	JCO	04.12.22
E	F06–0229	LMU	06.07.17
F	F07–0195	LMU	07.05.25
G	F08–0146	YOV	08.04.11

mat'l. code: SEE NOTES

surface: ISO 1302

tolerance: ISO 406 ISO 1101
tolerances unless otherwise specified
angles
linear: .X ±0.3; .XX ±0.13; .XXX ±0.05

projection

mm

scale 2:1

dr	O.MATHEVON	95.11.28
engr	JM.PHAMVAN	95.11.28
chr	L.MULIN	04.12.20
appd	JCO	04.12.22

sheet index | revision sheet

product family: QUICKIE

title: SHR.EL.HEADER R.A, RETENTION LEGS

dwg no: 71978

sheet 1 of 1

size: A3

type: CUSTOMER Drawing

Copyright FCI
FCIconnect.com