ebm-papst MFG. NOTES	
1	FLAT WITHIN 1.5mm (.059")
2	MUST BE RoHS COMPLIANT.

REV.	EC #	REVISION DESCRIPTION	DATE	D.ENG.	CHECKER
A	N/A	INITIAL PROTOTYPE RELEASE	14-Apr-15	CHW	JLL

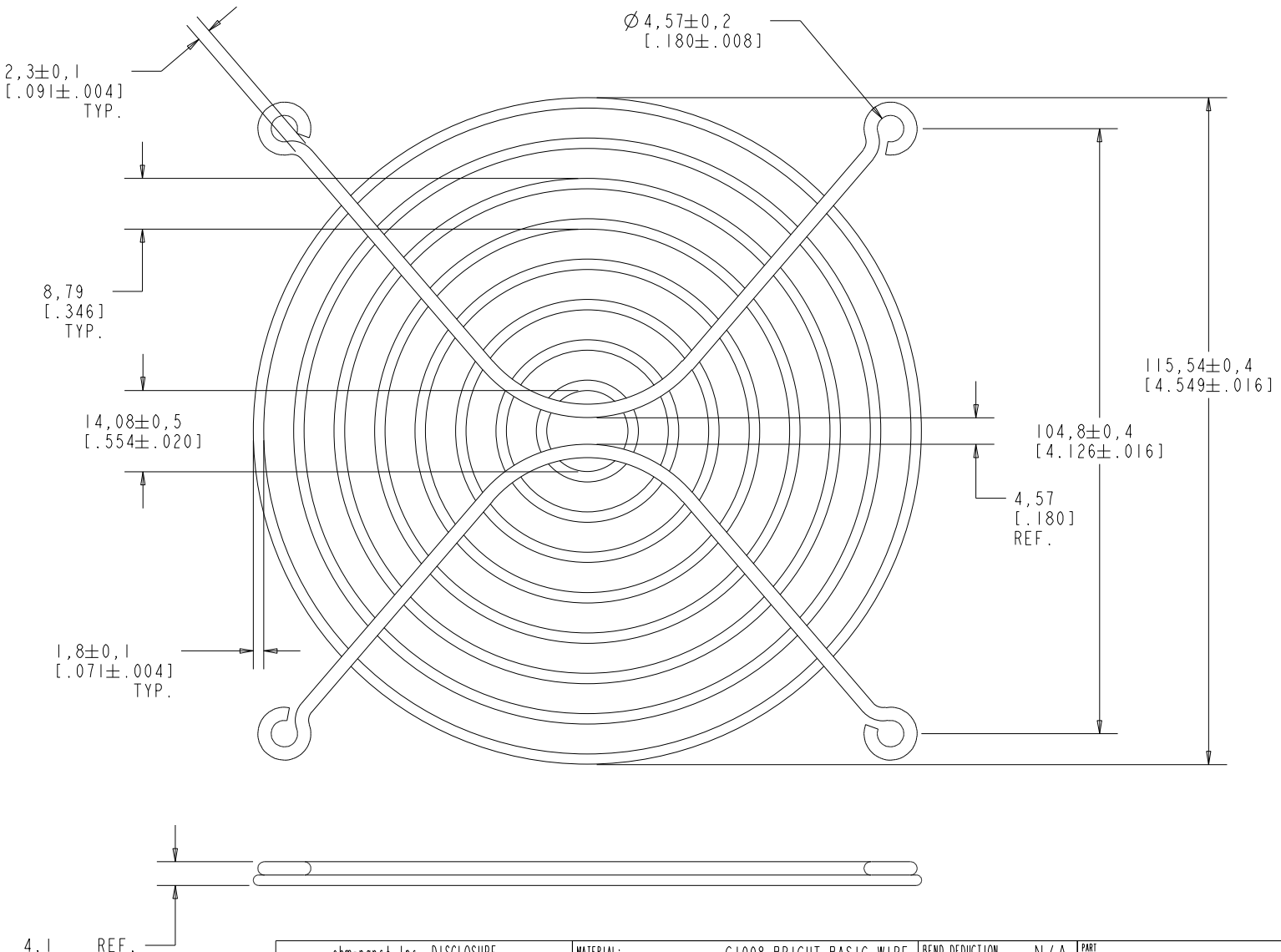

ebm-papst Inc. DISCLOSURE

THIS DOCUMENT IS THE PROPERTY OF ebm-papst Inc. ITS USE IS AUTHORIZED BY ebm-papst Inc. ONLY. ALL QUESTIONS MUST BE REFERRED TO ebm-papst Inc. PERSONNEL: DESIGN ENG., MFG.ENG., AND / OR PURCHASING.

CAUTION: ANY PRINTED COPY IS UNCONTROLLED AND TO BE USED FOR REFERENCE ONLY. REFER TO ebm-papst Inc. CAD SYS. FOR VERIFICATION.

Form No. 1073 Rev. H

MATERIAL:	C1008 BRIGHT BASIC WIRE	BEND DEDUCTION	N/A
FINISH:	BRIGHT NICKEL CHROME	COSMETICS PER ebm-papst SPEC-0-1	
IF APPLICABLE PLACE SECOND FINISH AND DESCRIPTION HERE		SEE CAD FOR DIMS. NOT SHOWN	
ALL INNER BEND RADII = 1mm BOTTOM BEND UNLESS OTHERWISE STATED		BREAK ALL SHARP EDGES	
TOLERANCES, UNLESS OTHERWISE STATED:		~~ALL DIMENSIONS ARE IN INCHES~~	

DECIMAL .XXX ± .020 HOLES .XXX ± .003 TOLERANCES FOR CNC FLAT .XXX
TOLERANCE .XX ± .030 ANGLES ± 1° REF EXCLUDING HOLE DIA. +/- .010

THIRD ANGLE PROJECTION

PART NO.	LZ30F				
TITLE	LZ30-F, 120mm WIRE FINGERGUARD				
FIRST USED ON	N/A				
DESIGN ENG.	CHW	ORIG.DATE	14-Apr-15	E#	N/A
REVISION	A	SHEET	1 of 1		

ebmpapst