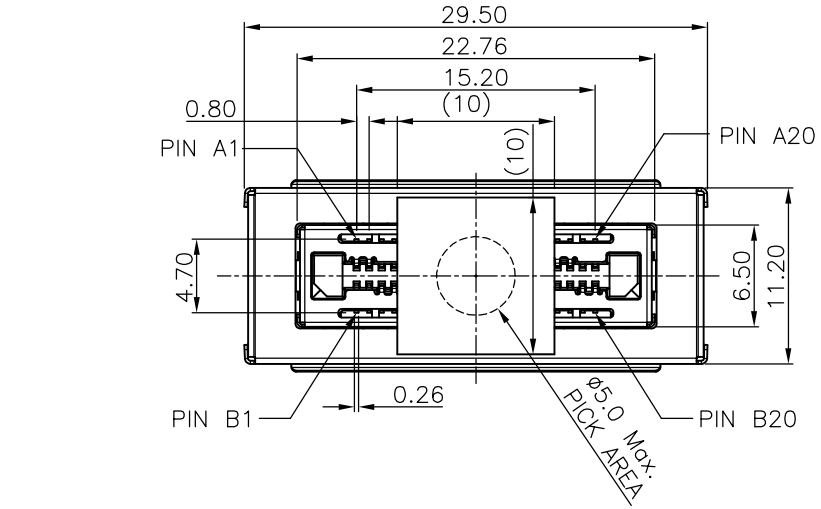

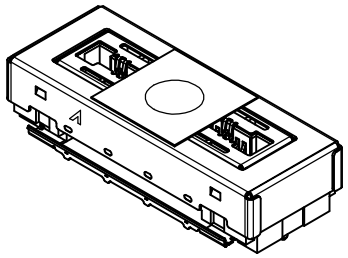

NOTES:
1. MATERIAL:
   1.1 HOUSING:THERMOPLASTIC, HIGH TEMP., UL94V-0; COLOR:BLACK.
   1.2 CONTACT:COPPER ALLOY
   1.3 FITTING NAIL:COPPER ALLOY
   1.4 SHELL:SUS
   1.5 SHELL:COPPER ALLOY
2. FINISH:
   CONTACT:SEE ORDER INFORMATION.
   UNDERPLATING: 50~100u" NICKEL OVERALL.
3. REFLOW SOLDER CAPABLE TO 260°C PER ACES SPEC.
4. SPEC. PLS. REFER TO PS-51079-xxxxx-xxx
5. PACKAGE PLS. REFER TO 51079-xxxCR-00
6. MATING CONNECTOR P/N:51082-xxxxx-xxx
7. PART NUMBER
   51081-XXX X X-001
   CKTS 040.40PIN
   PACK 4.TAPE&REEL WITH MYLAR
   CONTACT PLATING 2.GOLD FLASH

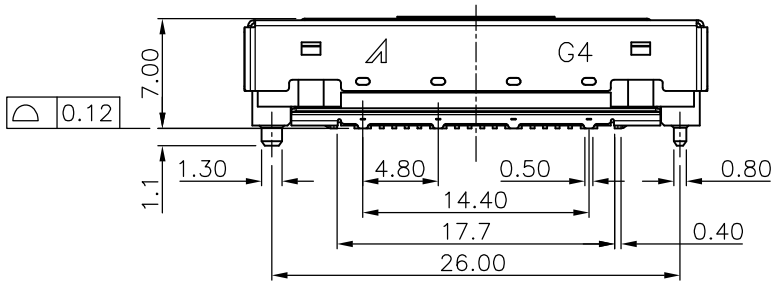

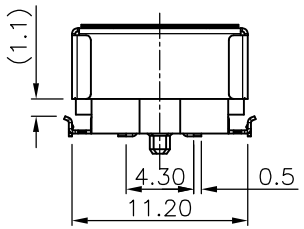

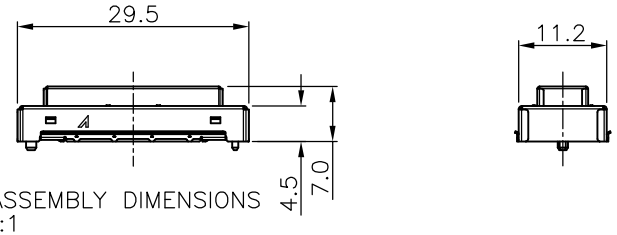

STEEL ASSEMBLY DIMENSIONS
Scale 1:1

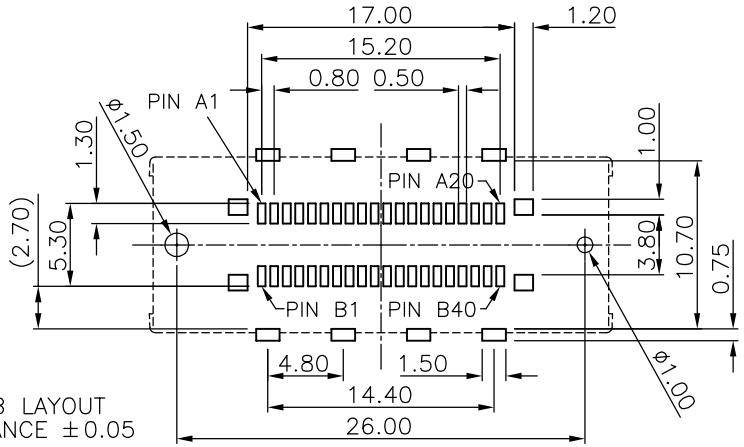

RECOMMEND PCB LAYOUT
GENERAL TOLERANCE ±0.05

PROPOSAL DRAWING

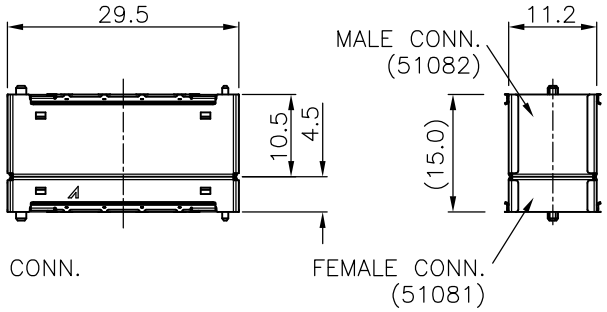

PIN DEFINE

Pin	1	2	3	4	5	6	7	8	9	10	11	12	13	14	15	16	17	18	19	20
SIDE A	G	G	S	S	G	G	S	S	G	G	S	S	G	G	S	S	G	G	–	–
SIDE B	–	–	G	G	S	S	G	G	S	S	G	G	S	S	G	G	S	S	G	G

QUALITY SYMBOLS MAJOR CRITICAL	DRAWN BY: CHEN CHUN YUAN — DATE: 20'/05/21 CHECKED BY: TSO I HUNG — DATE: 20'/05/21 APPROVED BY: WANG CHUN SHENG — DATE: 20'/05/21	ACES ELECTRONICS	
GENERAL TOLERANCES (UNLESS SPECIFIED) X. ±0.5 .X ±0.25 .XX ±0.15 .XXX ±0.1 ANGLES ±2°		TITLE: 0.8mm BTB CONN. H:15.0mm FEMALE SIDE	
	UNITS: mm	SIZE: A4	RFQ NO.: N/A
	SCALE: 2 : 1 — SHEET NO.: 1 OF 1	REV: 1	DWG NO.: 51081-xxxxx-xxx