This document is the property of Amphenol Corporation and is delivered on the express condition that is not to be disclosed, reproduced or used, in whole or in part, for manufacture or sale by anyone other than Amphenol Corporation without its prior consent, and that no right is granted to disclose or to use any information in this document.

The marking on thisproduct doesn't contain environmental hazardous material and must follow one or more specifications per Material Specification SS-00259 for Sony GP compliant or per directive 2011/65/EC for RoHS compliant or per IEC 61249-2-21 for Halogen Free compliant.

Amphenol Taiwan RoHS Halogen Free 2011/65/EU+IEC61249-2-21

ORIGINAL

REVISIONS				
SYM	ECN No.	DESCRIPTION	DATE	BY
A	NE-14122	RELEASE TO PRODUCTION	06/20/2014	Sondra Sang
B	NE-17028	ADDED PANEL CUTOUT	02/10/2017	Sondra Sang

PART NUMBER:
GSB4 116 3 4 X HR

CONTACT FINISH
3: 30μ" GOLD

PLASTIC MATERIAL
4: NYLON, BLUE

SOLDER TAIL LENGTH
1. DIM. L=1.90 mm
2. DIM. L=2.40 mm
3. DIM. L=2.80 mm
4. DIM. L=3.30 mm

ISSUED BY AMPHENOL TAIWAN PDF Format D.C.

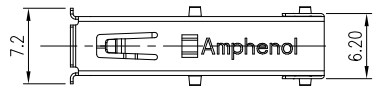

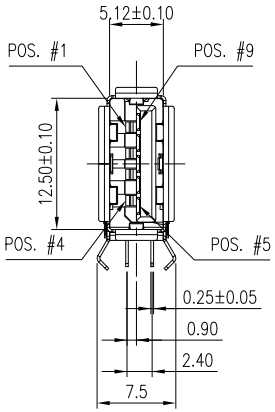

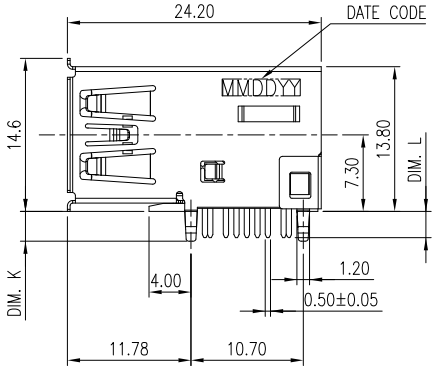

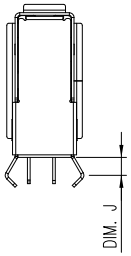

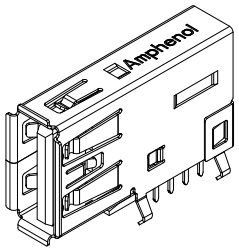

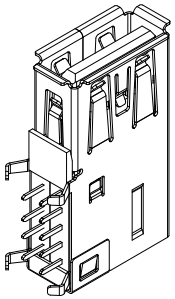

PIN #	SIGNAL NAME
1	VBUS
2	D-
3	D+
4	GND
5	SSRX-
6	SSRX+
7	GND_DRAIN
8	SSTX-
9	SSTX+
SHELL	SHIELD

PIN ASSIGNMENT

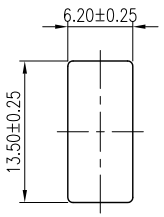

RECOMMENDED PANEL CUTOUT

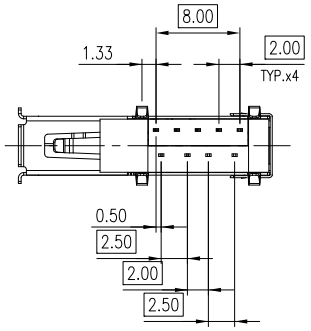

DIM. J	DIM. K	DIM. L	PCB THICKNESS	PROCESS
1.7 mm	2.8 mm	2.40mm	1.6mm	WAVE SOLDING
1.7 mm	2.8 mm	1.90mm	1.6mm	PIP
2.6 mm	3.8 mm	3.30mm	2.5mm	WAVE SOLDING
2.6 mm	3.8 mm	2.80mm	2.5mm	PIP

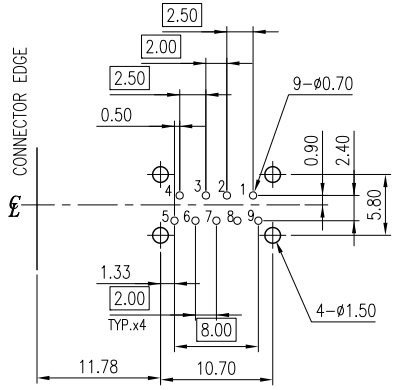

RECOMMENDED PCB LAYOUT- TOP VIEW
(OTHER GENERAL TOLERANCES: ±0.05)

NOTES:
1. HOUSING: HIGH TEMPERATURE THERMOPLASTIC, UL 94V-0, COLOR- BLUE
2. CONTACT: COPPER ALLOY, 0.25mm THICKNESS, 30μ" MIN. GOLD PLATED ON CONTACT AREA, 120μ" MIN. MATTE TIN PLATED ON SOLDERING TAIL, 80μ" MIN. NICKEL UNDER-PLATED OVERALL
3. METAL SHELL: STAINLESS STEEL, 0.25mm THICKNESS, 30μ" MIN. NICKEL UNDER-PLATED OVERALL
4. REAR SHELL: STAINLESS STEEL, 0.25mm THICKNESS
5. THIS PRODUCT DOESN'T CONTAIN ENVIRONMENTAL HAZARDOUS MATERIALS PER DIRECTIVE 2011/65/EC FOR RoHS AND PER IEC 61249-2-21 FOR HALOGEN FREE COMPLIANT.

TOLERANCE	APPROVALS	DATE	TITLE			
X.	DRAWN Sondra Sang	2/10/2017	USB 3.1 CONNECTOR STANDARD A, UPRIGHT DIP TYPE			Amphenol® Amphenol Corporation Amphenol Taiwan Corporation
X.X ±0.30 X.XX ±0.20 X.XXX ±0.10	CHECKED Chenny Yeh	2/10/2017				
ANGULAR ±1°	APPROVED Hank Hsu	2/10/2017		UNIT mm	SIZE A3	PART No. GSB4 116 34X HR
UNLESS OTHERWISE SPECIFIED	DWG TYPE CUST DWG	PROJECT CODE T536		SCALE NA	SHEET 1 OF 1	DWG No. GSB411634XHR REV. B

This document is the property of Amphenol Corporation and is delivered on the express condition that is not to be disclosed, reproduced or used, in whole or in part, for manufacture or sale by anyone other than Amphenol Corporation without its prior consent, and that no right is granted to disclose or to use any information in this document.

The marking on this product doesn't contain environmental hazardous material and must follow one or more specifications per Material Specification SS-00259 for Sony GP compliant or per directive 2011/65/EC for RoHS compliant or per IEC 61249-2-21 for Halogen Free compliant.

Amphenol Taiwan RoHS Halogen Free 2011/65/EU+IEC61249-2-21

ORIGINAL

ISSUED BY AMPHENOL TAIWAN PDF Format D.C.

REVISIONS

SYM	ECN No.	DESCRIPTION	DATE	BY
A	NE-14016	RELEASE TO PRODUCTION	01/24/2014	Sondra Sang
B	NE-17028	ADDED NOTE 5	02/10/2017	Sondra Sang

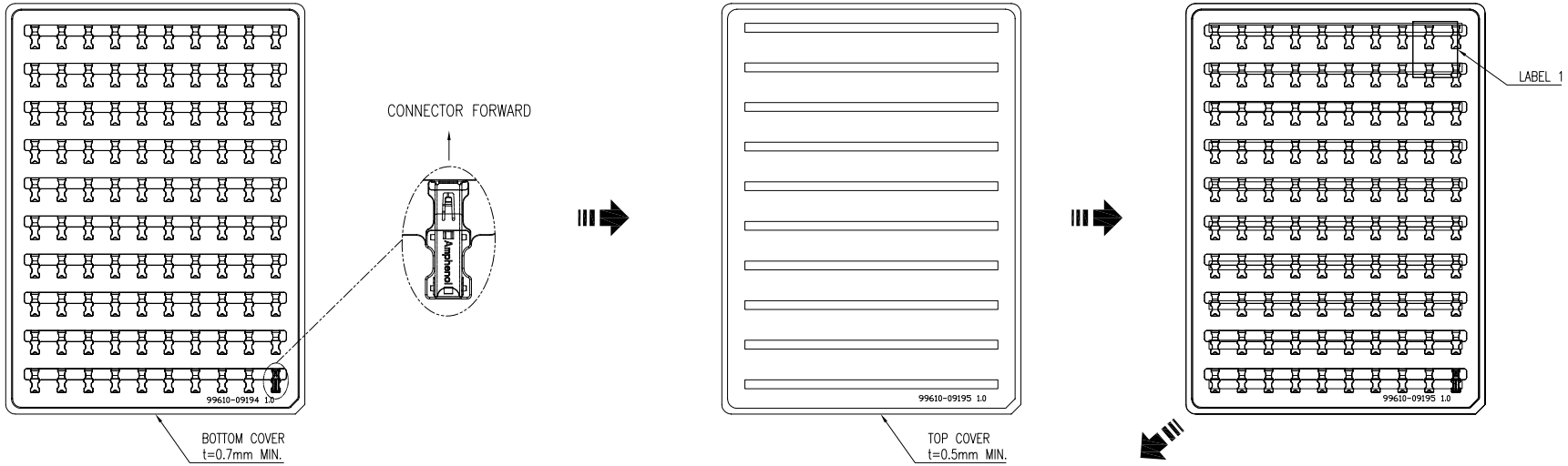

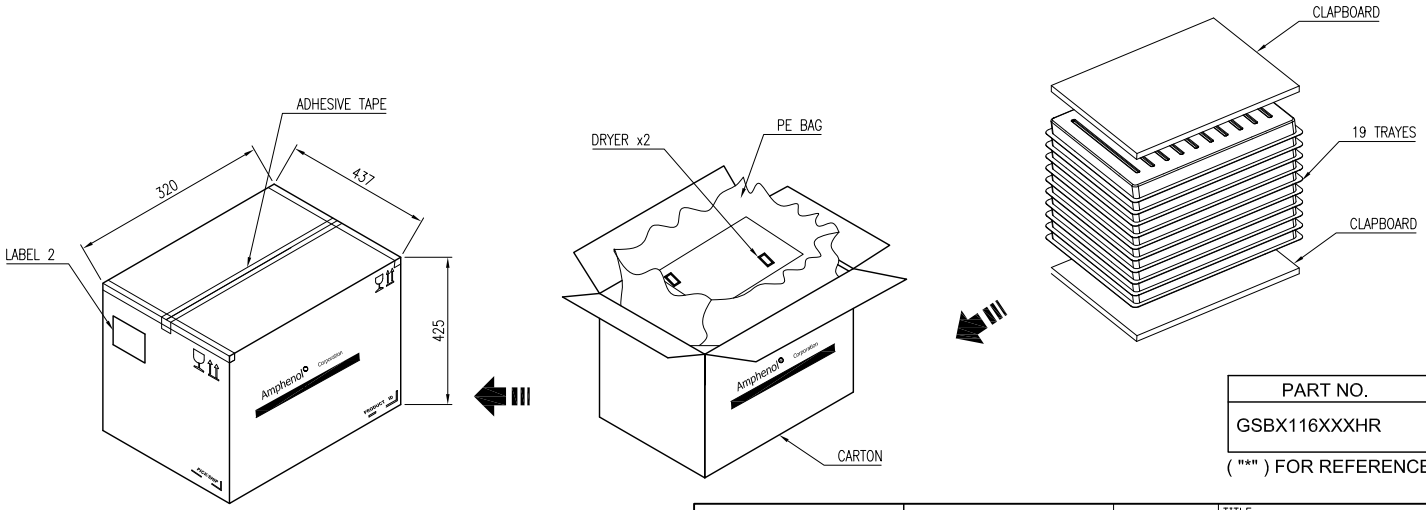

P/N : GSB3116XXXHR	P/N OPTIONAL
Q'TY : 100	LABEL 1 = Q'TY : 100 LABEL 2 = Q'TY : 1900
P/O : 411-012345-001	
DATE : 07 / 31 / 2013 MM / DD / YYYY	
G.W : 15.00 KG H F	
Amphenol Taiwan Corporation	

LABEL 1 & LABEL 2

PART NO.	PCS. / TRAY	TRAY / CARTCON	N.W.	G.W.
GSBX116XXXHR	100 PCS.	100X19=1900 PCS.	*	*

("*") FOR REFERENCE

NOTES:
1. MATERIAL: TRAY- PET
3. THE BARCODE MUST BE 3 OF 9 BARCODE
4. COMPONENTS LOAD PER THE TRAY: 100 PCS.
5. STORAGE CONDITION MUST FOLLOW MSL (MOISTURE SENSITIVITY LEVEL) 1
6. THIS PRODUCT DOESN'T CONTAIN ENVIRONMENTAL HAZARDOUS MATERIALS PER DIRECTIVE 2011/65/EC FOR RoHS COMPLIANT

TOLERANCE	APPROVALS	DATE	TITLE		
X. ±0.20 X.X ±0.15 X.XX ±0.10 X.XXX ±0.05	DESIGNED Sondra Sang	2/10/2017	USB3.0/ 3.1 CONNECTORS A TYPE, UPRIGHT TRAY PACKING		Amphenol ® Amphenol Corporation Amphenol Taiwan Corporation
	CHECKED Chenny Yeh	2/10/2017			
ANGULAR ±1°	APPROVED Hank Hsu	2/10/2017	UNIT mm / SIZE A3		PART No. GSBX 116 XXX HR
UNLESS OTHERWISE SPECIFIED	DWG TYPE ENG DWG	PROJECT CODE T536	SCALE NA / SHEET 1 OF 1		DWG No. PKS_GSBX116P01HR / REV. B