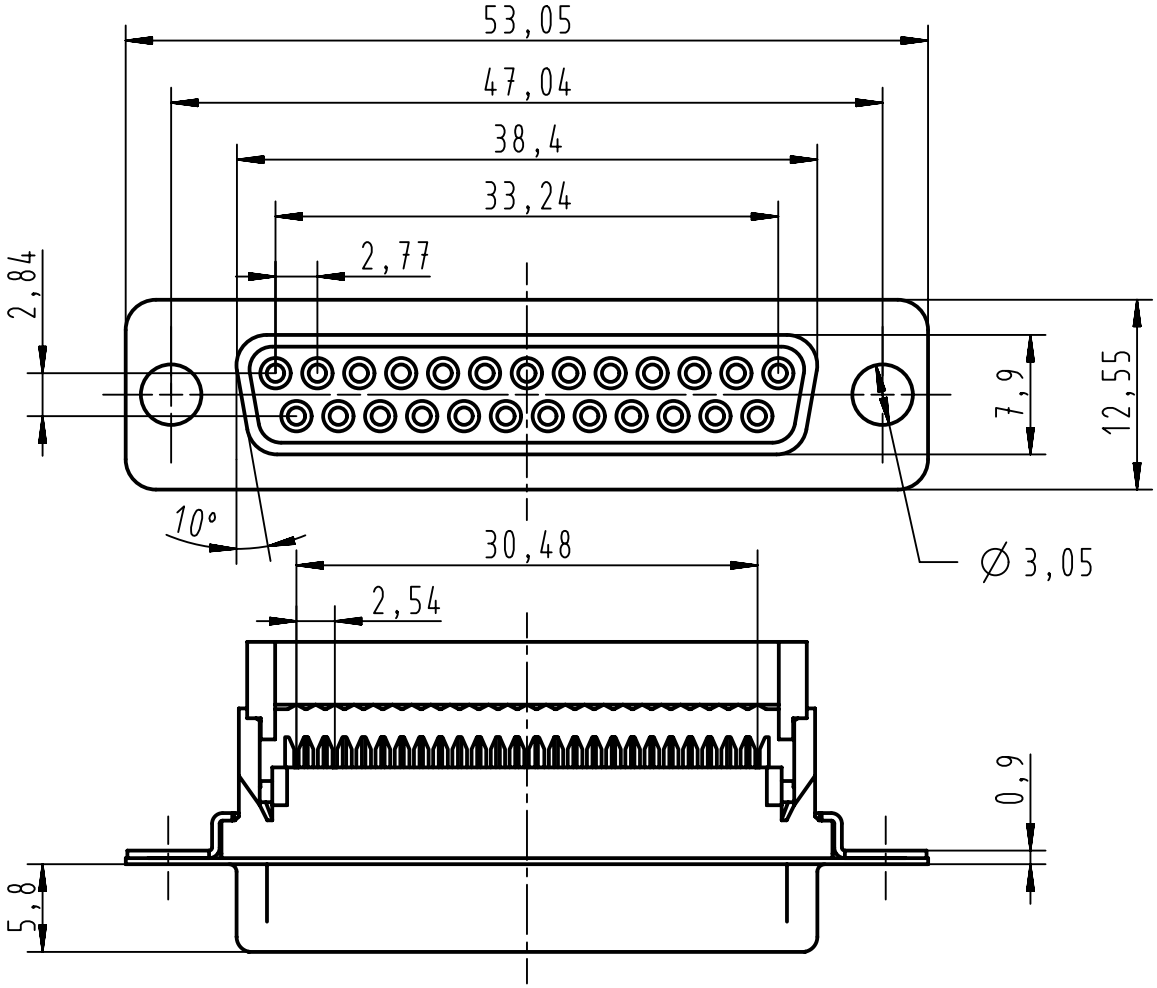

Recommended panel cutout dimensions
for rear mounting
According to CECC 75 301-802

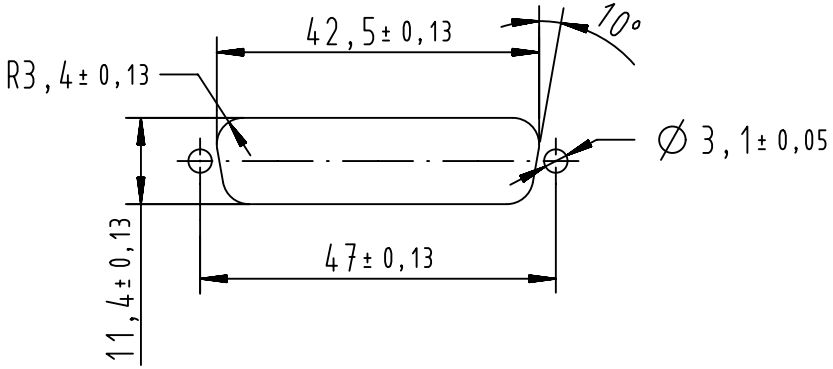

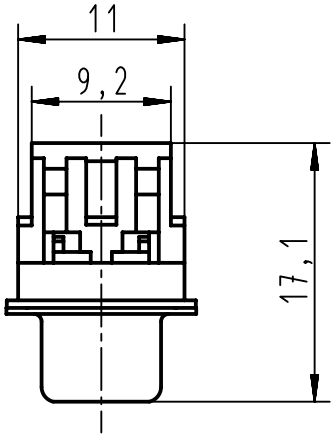

After closing cover

09663187500	PL3
09663186500	PL2
Part number	Performance level

All Dimensions in mm
Original Size DIN A4

All rights reserved

Department EC PD - FR

HARTING Electronics GmbH
D-32339 Espelkamp

Scale 2:1	Free size tol.		Ref. / Sub.	
Created by DOUGE	Inspected by BAGDIKIAN	Standardisation HOFFMANN	Date 2013-04-23	State Final Release
Title D-Sub IDC 25P female straight				Doc-Key / ECM-Nr. 100527215/UGD/001/A 5000000058839
Type TB	Number 0966318X500		Rev. A	Page 1/1

A4