THIS DRAWING IS UNPUBLISHED. RELEASED FOR PUBLICATION -,- .
© COPYRIGHT - BY TYCO ELECTRONICS CORPORATION. ALL INTERNATIONAL RIGHTS RESERVED.

| LOC | DIST |
|---|---|
| AF | 50 |

REVISIONS

| P | LTR | DESCRIPTION | DATE | DWN | APVD |
|---|---|---|---|---|---|
| | L | REVISED PER ECR-10-006099 | 10JUL10 | HMR | PD |

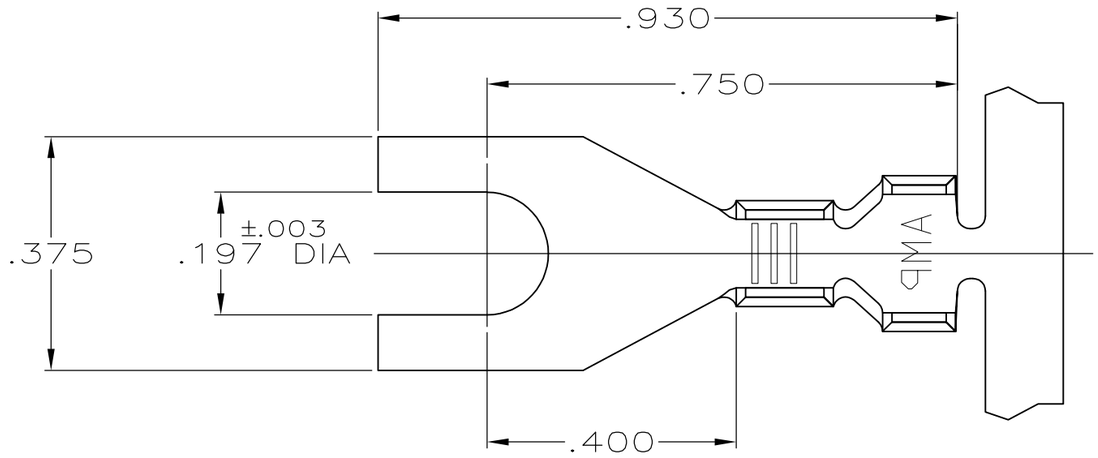


1. CONTINUOUS STRIP ON REEL.
2. P/N 61857-2 IS REVERSE REELED.

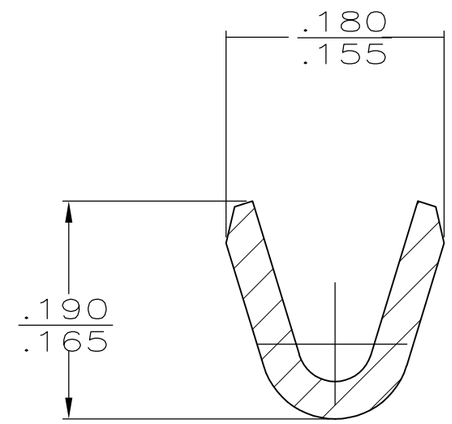


SECTION A-A
SCALE 8:1

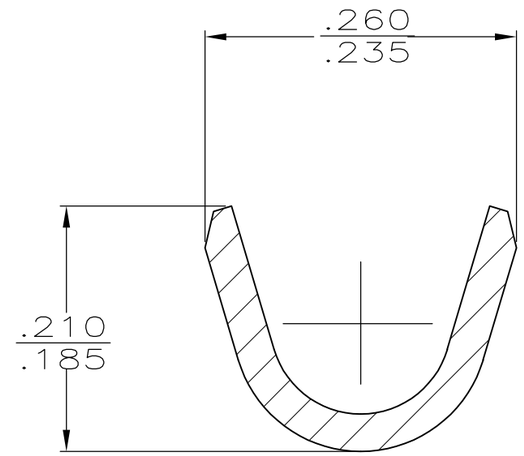


SECTION B-B
SCALE 8:1

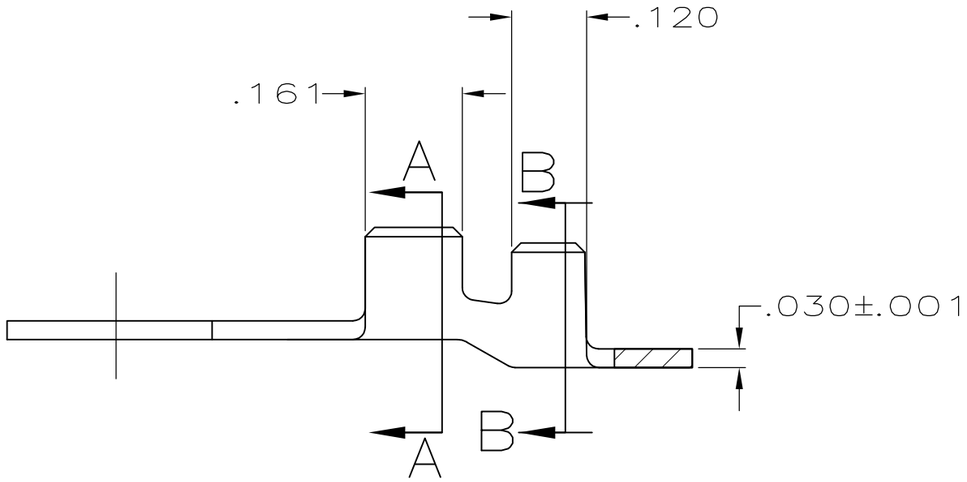


| OBSOLETE | .090-.150 DIA | 18-14 AWG | 61857-2 |
|---|---|---|---|
| | | | ~~61857-1~~ |
| | INSULATION RANGE | WIRE RANGE | PART NO |

THIS DRAWING IS A CONTROLLED DOCUMENT.

DIMENSIONS: INCHES

TOLERANCES UNLESS OTHERWISE SPECIFIED:

| | |
|---|---|
| 0 PLC | ± - |
| 1 PLC | ± - |
| 2 PLC | ± - |
| 3 PLC | ± .015 |
| 4 PLC | ± - |
| ANGLES | ± - |

MATERIAL: #2 HARD BRASS

FINISH: TIN

| | | |
|---|---|---|
| DWN | P FORTNEY | 4/15/91 |
| CHK | JR RUTH | 4/15/91 |
| APVD | G YETTER | 4/15/91 |
| PRODUCT SPEC | — | |
| APPLICATION SPEC | — | |
| WEIGHT | — | |

Tyco Electronics

Tyco Electronics Corporation
Harrisburg, PA 17105-3608

NAME: SPADE

| SIZE | CAGE CODE | DRAWING NO | RESTRICTED TO |
|---|---|---|---|
| A3 | 00779 | C-61857 | — |

CUSTOMER DRAWING

| SCALE | SHEET | REV |
|---|---|---|
| 4:1 | 1 OF 1 | L |