DRAWING MADE IN THIRD ANGLE PROJECTION

LOC AG DIST 53

© COPYRIGHT 1966 BY AMP INCORPORATED, HARRISBURG, PA. ALL INTERNATIONAL RIGHTS RESERVED. AMP INCORPORATED PRODUCTS COVERED BY U. S. AND FOREIGN PATENTS AND/OR PATENTS PENDING.

REVISIONS

P	P	ZONE	LTR	DESCRIPTION	DATE	APPROVED
✓	✓		J	REDRAWN W/O CHNG M-5090	4-25-78	D.H.
✓	✓		K	REV, ADDED 1--1, M-5182, M-5230	3/23/79	DAS/D.H.
✓	✓		L	REV. NOTE 2 M-5446	3/10/79	DAS/D.H.
✓			L1	RESTORATION	4-24-86	ESB/DB
✓			M	REV AG 1047 LOC TO CY	12-22-87	JBM
			M1	REV PER AG-5173	4-12-88	VS
✓	✓		N	REV PER AG-5123	5-10-88	RCF

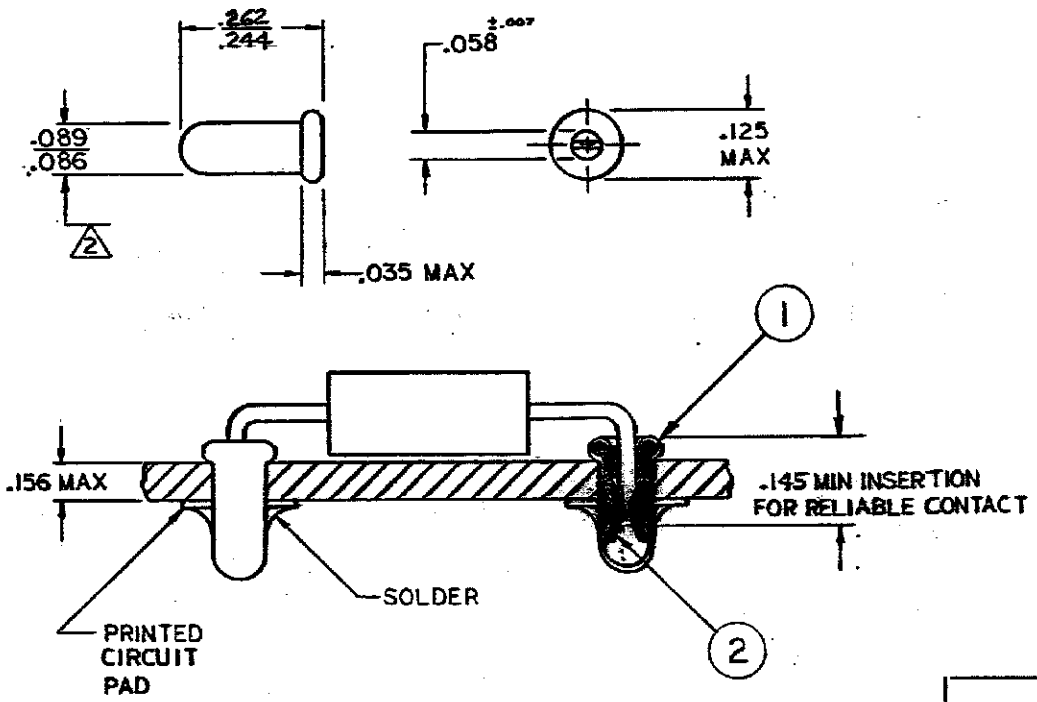

1 ACCEPTS .036-.054 DIA PIN.

2 FITS INTO NO. 43 DRILLED HOLE (.0890 ±.0015) FOR HAND INSERTION OR NO. 44 DRILLED HOLE (.0860 ±.0015) FOR MACHINE INSERTION

ITEM No.	DESCRIPTION	MATERIAL & FINISH	PART NO
1	CUP	COPPER, TIN-LEAD	1-380758-1
2	SPRING	BE.CU, GOLD	
1	CUP	COPPER, TIN-LEAD	1-380758-0
2	SPRING	BE.CU., TIN	

UNLESS OTHERWISE SPECIFIED DIMENSIONS ARE IN INCHES. TOLERANCES ON: DECIMALS ±.015 ANGLES ±

MATERIAL: SEE TABLE

FINISH: SEE TABLE

CONTRACT NO

DR 4-25-78

CHK

APPD

APPD

DSGN APPD

OTHER APPD

AMP INCORPORATED Harrisburg, Pa.

NAME: REUSABLE COMPONENT RECEPTACLE

SIZE: B | CODE IDENT NO: 00779 | DRAWING NO: 380758

SCALE | SHEET

AMP 1470-15 (7-73)

CUSTOMER DRAWING