DRAWING MADE IN THIRD ANGLE PROJECTION

1528047 ⇩ 1528047

/home/us016926/DMTECmod

PART NUMBER	REV	FIRST USED	TERMINATOR	FEED TYPE	DESCRIPTION
1528047-1	C	-	LEADMAKER	MECH POST FEED	CUTS CARRIER
1528047-2	C	-	BENCH	MECH PRE FEED	CUTS CARRIER
1528047-6	C	-	LEADMAKER	MECH POST FEED	CONTINUOUS CARRIER
7-1528047-1	C	-	LEADMAKER	MECH POST FEED	-1 AND SPARE PARTS
7-1528047-2	C	-	BENCH	MECH PRE FEED	-2 AND SPARE PARTS
7-1528047-6	C	-	LEADMAKER	MECH POST FEED	-6 AND SPARE PARTS
7-1528047-7	A	-	-	-	SPARE PARTS KIT

CRIMP DATA AMP TERMINAL AMP CRIMP SPECS

TERMINAL NAME: CONTACT, PIN MOD IV

CRIMP	SIZE	TYPE	RANGE
WIRE	1.07 [.042 IN]	F	26 - 22 AWG
INSUL	1.57 [.062 IN]	O	1.55 MAX [.061 MAX]

WIRE STRIP LENGTH	APPL INSTRUCTION
2.77-4.37 [.109-.172 IN]	408-8322 & 408-8490

TERMINAL APPL SPEC			FEED
TERMINAL	-	-	FEED
APPL SPEC	114-25016	-	7.62 [.300 IN]

TERMINALS APPLIED

102095	-	-	-	-
166678	-	-	-	-
-	-	-	-	-
-	-	-	-	-
-	-	-	-	-
-	-	-	-	-
-	-	-	-	-
-	-	-	-	-

WIRE SIZE mm² AWG	CRIMP HEIGHT ✳	REF SETTING
22 AWG	0.91 ±0.05 [.036 ±.002 IN]	C 8
24 AWG	0.81 ±0.05 [.032 ±.002 IN]	D 5
26 AWG	0.76 ±0.05 [.030 ±.002 IN]	D 9
-	-	-
-	-	-
-	-	-
-	-	-
-	-	-
-	-	-
-	-	-
-	-	-
-	-	-
-	-	-
-	-	-
-	-	-

1. RECOMMENDED SPARE PARTS.
2. GREASE RAM, CAM, CAM FOLLOWER AND FEED ROD LIGHTLY.
3. LUBRICATE DAILY PER THE APPLICATOR INSTRUCTION SHEET SUPPLIED WITH THE APPLICATOR.
4. CERTAIN TERMINALS REQUIRE LUBRICATION. REFER TO THE APPLICATOR INSTRUCTION SHEET FOR MORE INFORMATION.
5. CUT TO LENGTH AT ASSY.

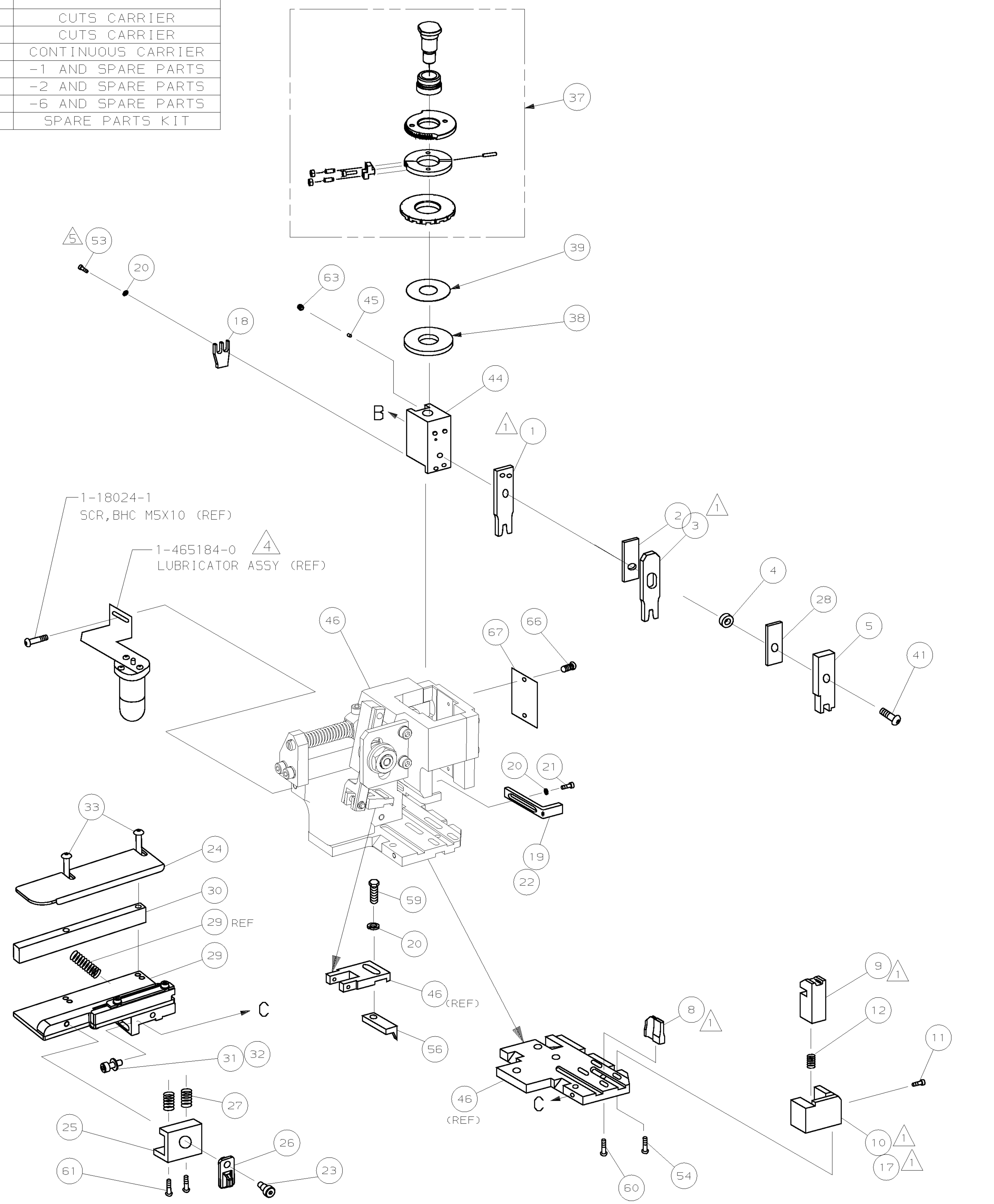

VIEW B ROTATED 180°

POST FEED 40 mm STROKE	POST FEED 30 mm STROKE	PRE FEED 30 mm STROKE	PRE FEED 40 mm STROKE

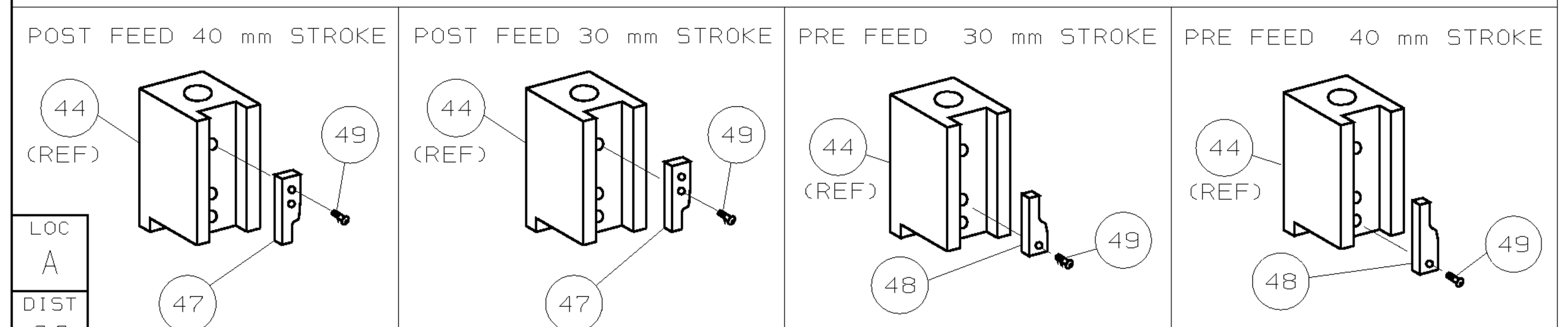

✳ WARNING:
ON INSTALLATION, SET WIRE DISC TO LARGEST WIRE SIZE SETTING. USE OF SETTINGS BELOW MIN REQ'D CRIMP HEIGHT SETTING WILL CAUSE DAMAGE TO CRIMP TOOLING.

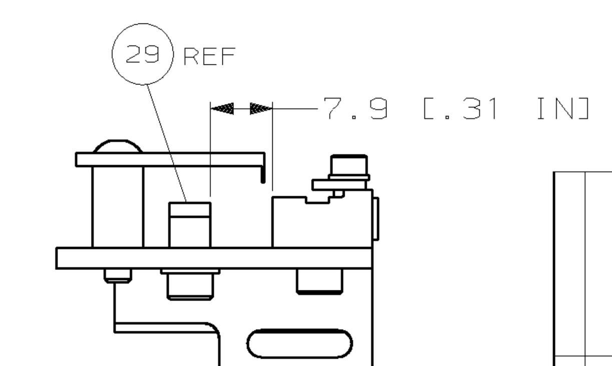

FENCE SET-UP DIM

NOTE	-77	-76	-72	-71	-6	-2	-1	PART NO	DESCRIPTION	ITEM NO
										73
	-	1	1	1	1	1	1	1528047	PRINT, APPLICATOR LOG SHEET	72
	-	1	1	1	1	1	1	1338705-3	DOCUMENTATION PACKAGE	71
										70
										69
										68
	-	1	1	1	1	1	1	461264-5	PLATE, IDENTIFICATION	67
	-	2	2	2	2	2	2	21017-2	SCR,DRIVE(#2x.19)ID PLATE	66
										65
										64
	-	1	1	1	1	1	1	3-18031-0	SCR,SKT SET(M6X6)RAM	63
										62
	-	2	2	2	2	2	2	1-18024-5	SCR,BHC(M5X25)DRAG	61
	-	1	1	1	1	1	1	18024-7	SCR,BHC(M4X10)ANVIL	60
	-	1	1	1	1	1	1	5-18022-2	SCR,HEX(M4X8)FEED FINGER	59
										58
										57
	-	1	1	1	1	1	1	1338685-1	PAWL, FEED	56
										55
	-	2	2	2	2	2	2	18024-8	SCR,BHC(M4x12)SHEAR HOLDER	54
5	-	2	2	2	2	2	2	1-18023-0	SCR,SHC(M4x8)TERM HLD DWN	53
										52
										51
										50
	-	1	1	1	1	1	1	18024-3	SCR,BHC(M3X10)CAM	49
	-	-	1	-	-	1	-	1338675-1	CAM, PRE FEED 30 & 40 mm ST	48
	-	1	-	1	1	-	1	1338676-1	CAM, POST FEED 30 & 40 mm ST	47
	-	1	1	1	1	1	1	1320999-3	APPLICATOR BASIC SUBASSY	46
	-	1	1	1	1	1	1	690191-1	PLUG, NYLON	45
	-	1	1	1	1	1	1	1338660-1	RAM	44
										43
										42
	-	1	1	1	1	1	1	2-18024-6	SCR,BHC(M8X25)RAM	41
										40
	-	1	1	1	1	1	1	690125-1	SHIM SUBASSY	39
	-	1	1	1	1	1	1	469367-7	SPACER, FINE ADJUST	38
	-	1	1	1	1	1	1	879103-3	FINE ADJUST HEAD SUBASSY	37
										36
										35
										34
	-	2	2	2	2	2	2	1-18024-0	SCR,BHC(M4X20)STRIP GUIDE	33
	-	1	1	1	1	1	1	18027-2	WASHER, FLAT(M4)	32
	-	1	1	1	1	1	1	1-18023-2	SCR,SKT CAP(M4X12)MOUNT BLOCK	31
	-	1	1	1	1	1	1	1320908-9	SPACER, STRIP GUIDE	30
	-	1	1	1	1	1	1	1633073-1	STRIP GUIDE PLATE ASSY	29
	-	1	1	1	1	1	1	1-455888-0	SPACER, FRONT SHEAR DEP	28
	-	2	2	2	2	2	2	1-22284-0	SPRING, DRAG	27
	-	1	1	1	1	1	1	356835-1	LEVER, DRAG RELEASE	26
	-	1	1	1	1	1	1	240792-1	DRAG, TERMINAL	25
	-	1	1	1	1	1	1	1320928-1	PLATE, STRIP GUIDE	24
	-	1	1	1	1	1	1	980371-4	SCR,SHC SHLD	23
	-	1	-	1	1	-	1	690472-2	STRIPPER	22
	-	1	1	1	1	1	1	1-18023-1	SCR,SHC(M4X10)STRIPPER	21
	-	4	4	4	4	4	4	18025-2	WASHER,LOCK(M4)STRIPPER	20
	-	-	1	-	-	1	-	1424364-1	STRIPPER, WIRE STOP	19
	-	1	1	1	1	1	1	690518-2	HOLDER, TERMINAL	18
1	-	1	-	-	1	-	-	1338684-1	HOLDER, SHEAR, FRONT (NO-CUT)	17
										16
										15
										14
										13
	-	1	1	1	1	1	1	5-22280-0	SPRING, SHEAR	12
	-	1	1	1	1	1	1	356885-4	STOP, SHEAR	11
1	-	-	1	1	-	1	1	1320921-1	HOLDER, SHEAR, FRONT (CUT)	10
1	-	1	1	1	1	1	1	462006-1	SHEAR, FLOAT (FRONT)	9
1	1	2	2	2	1	1	1	1-1333200-9	ANVIL	8
										7
										6
	-	1	1	1	1	1	1	2-455889-0	DEPRESSOR, SHEAR (FRONT)	5
	-	1	1	1	1	1	1	1-238011-3	SPACER, BLOCK CRIMPER	4
1	1	2	2	2	1	1	1	7-456135-8	CRIMPER, INSULATION	3
	-	1	1	1	1	1	1	455888-4	SPACER, CRIMPER	2
1	1	2	2	2	1	1	1	456401-3	CRIMPER, WIRE	1

← REVISION OF EACH ASSY NO (WHEN BLANK, USE DWG REVISION)

QTY REQD PER ASSY — PARTS LIST

P	F	LTR	REVISION RECORD	APP	DATE
		C	ECN 0150-1338-03	TE	12-03
		B	ECN 0150-0831-02	DS	6-02
		A	SEE ECN 015A-0882-01	LJL	OCT01

DIMENSIONS: mm [INCHES]
DO NOT SCALE PRINT.
TOLERANCES UNLESS OTHERWISE SPECIFIED:
1 PLC DEC ±0.5 [.02 IN]
2 PLC DEC ±-
3 PLC DEC ±-
ANGLES ± -
SURF TEXTURE: √
REMOVE BURRS, BREAK SHARP EDGES R0.38 MAX

MATL	HT TR	FIN
- -	- -	- -

DR L.LOFTHOUSE 17SEP01 | APP 17SEP01 F.BACKHURST
CHK - - | REL 23OCT01 L.LOFTHOUSE

AMP — AMP Incorporated Harrisburg, PA 17105-3608

NAME: FINE ADJ SIDE FD HD-I APPL | MACHINE REF: HD-I APPL
SCALE: - | D | DWG NO: 1528047 | SHEET 1 OF 1 | REV C

CAGE CODE 00779 | CUSTOMER AND ASSEMBLY DRAWING | RESTRICTED TO —

LAYOUT L1528047
SET UP GAGE 458637-3

THIS DRAWING IS A CONTROLLED DOCUMENT.
THIS DRAWING IS UNPUBLISHED. © COPYRIGHT 2000 BY AMP INCORPORATED. ALL RIGHTS RESERVED.
RELEASED FOR PUBLICATION ,2000 .

LOC A
DIST 66

AMP 1756 REV 3-92 | 17-DEC-03 | 08:31:27 us016926

8 7 6 5 4 3