THIS DRAWING IS UNPUBLISHED. RELEASED FOR PUBLICATION 20
© COPYRIGHT 20 BY - ALL RIGHTS RESERVED.

LOC	DIST
GP	00

REVISIONS

P	LTR	DESCRIPTION	DATE	DWN	APVD
	A	REVISED PER ECR-14-002687	07MAR2014	NK	TM

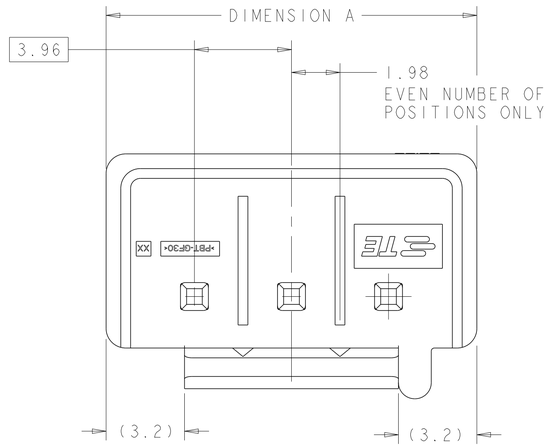

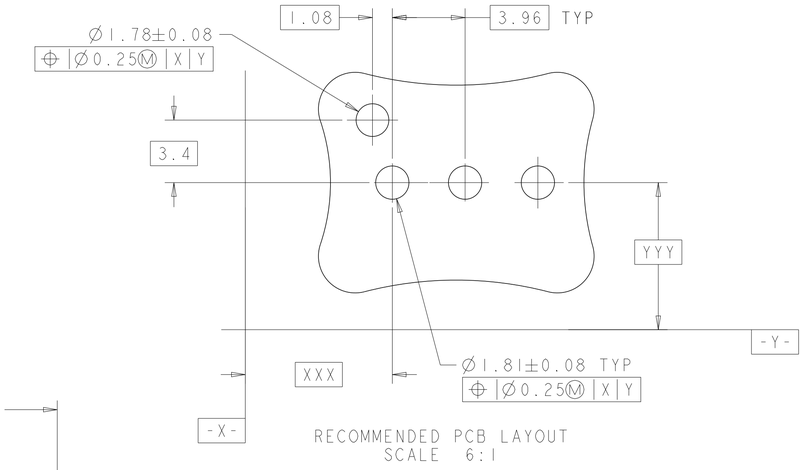

RECOMMENDED PCB LAYOUT
SCALE 6:1

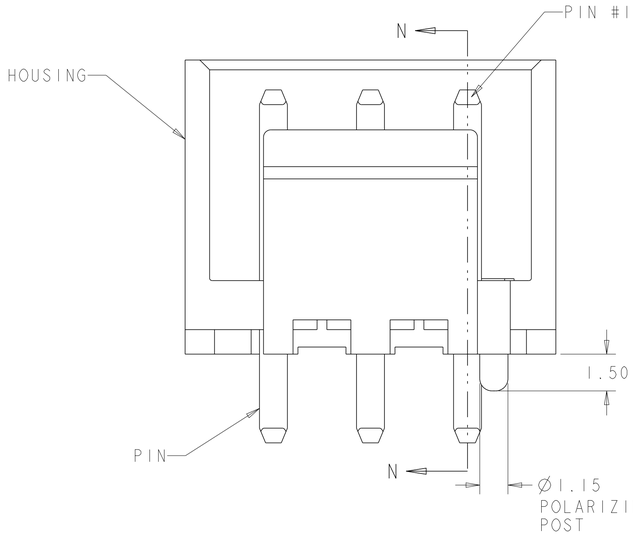

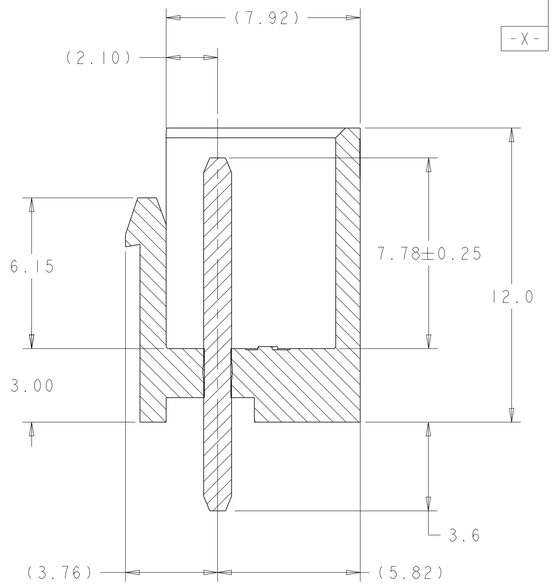

SECTION N-N

1. MATERIAL: HOUSING; PBT GLASS FILLED UL94V-0
PIN; BRASS, ORANGE

2. FINISH: PIN, 1.0µm MIN TIN OVER 0.8µm MIN NICKEL.

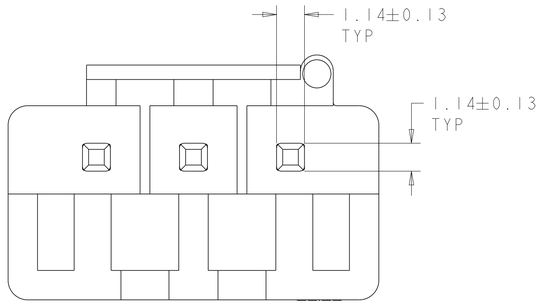

DIM A	POS	ASSEMBLY PART NO.
50.77	12	1-1744483-2
46.81	11	1-1744483-1
42.85	10	1-1744483-0
38.89	9	1744483-9
34.93	8	1744483-8
30.97	7	1744483-7
27.01	6	1744483-6
23.05	5	1744483-5
19.09	4	1744483-4
15.13	3	1744483-3
11.17	2	1744483-2

THIS DRAWING IS A CONTROLLED DOCUMENT.

DIMENSIONS: mm

TOLERANCES UNLESS OTHERWISE SPECIFIED:
0 PLC ±-
1 PLC ±0.50
2 PLC ±0.30
3 PLC ±-
4 PLC ±-
ANGLES ±-

MATERIAL 1
FINISH 2

DWN KIRAN HOLAL 28AUG2012
CHK MACE SAM 28AUG2012
APVD MACE SAM 28AUG2012
PRODUCT SPEC 108-5609
APPLICATION SPEC -
WEIGHT -

TE Connectivity

NAME SHROUDED HEADER ASSEMBLY, SINGLE LATCH, 3.96mm PITCH, ECONOMY POWER (EP), ORANGE

SIZE	CAGE CODE	DRAWING NO	RESTRICTED TO
A1	00779	C-1744483	-

Customer Drawing | SCALE 8:1 | SHEET 1 OF 1 | REV A

4805 (3/11)