| PART NUMBER | ENGINEERING NUMBER |
|---|---|
| 1300680039 | TC30200A45M010 |

CABLE LENGTH TOLERANCES
<.3M [1FT]: +19mm-0 [ +.75in-0]
.3 - .9M [1 - 3FT]: +44.5mm-0 [+1.75in-0]
.9 - 1.8M [3 - 6FT]: +55.6mm-0 [+2.19in-0]
1.8 - 3.7M [6 - 12FT: +88.9mm-0 [+3.50in-0]
3.7 - 7.3M [12 - 24FT]: +165.1mm-0 [+6.50in-0]
7.3-14.6M [24 - 48FT]: +317.5mm-0 [+12.50in-0]
14.6 - 30.5M [48-100FT]: +622.3mm-0 [+24.50in-0]
OVER 30M [100FT] +2% OF FINISHED LENGTH

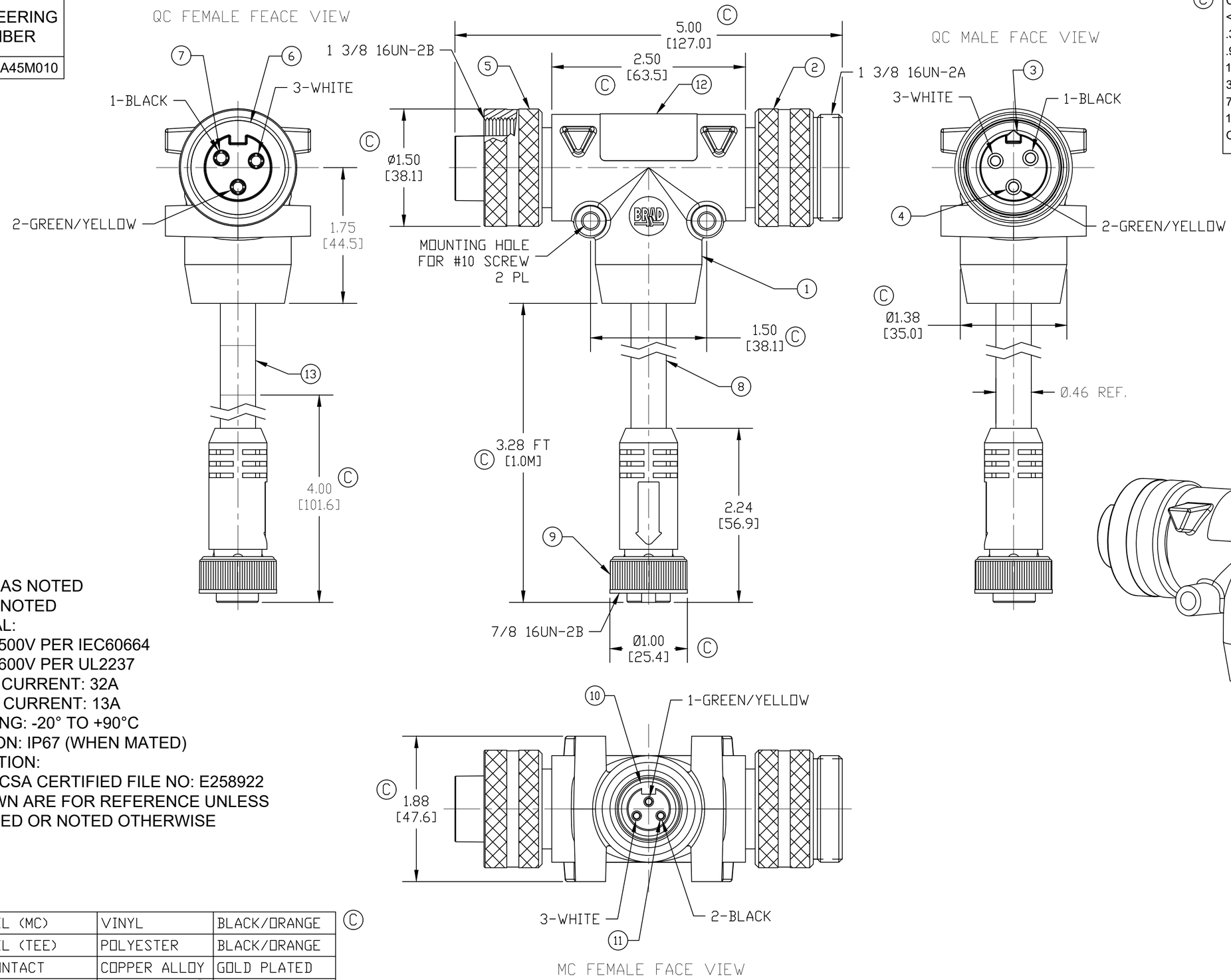


NOTES:
1. MATERIAL: AS NOTED
2. FINISH: AS NOTED
3. ELECTRICAL:
   VOLTAGE: 500V PER IEC60664
   600V PER UL2237
   MAX THRU CURRENT: 32A
   MAX DROP CURRENT: 13A
4. TEMP RATING: -20° TO +90°C
5. PROTECTION: IP67 (WHEN MATED)
6. CERTIFICATION:
   UL LISTED/CSA CERTIFIED FILE NO: E258922
7. (C) DIMS SHOWN ARE FOR REFERENCE UNLESS TOLERANCED OR NOTED OTHERWISE

| ITEM | DESCRIPTION | MATERIAL | FINISH |
|---|---|---|---|
| 13 | WARNING LABEL (MC) | VINYL | BLACK/ORANGE |
| 12 | WARNING LABEL (TEE) | POLYESTER | BLACK/ORANGE |
| 11 | MC SOCKET CONTACT | COPPER ALLOY | GOLD PLATED |
| 10 | MC FEMALE INSERT | TPE (C) | BLACK |
| 9 | MC COUPLING NUT | ZINC ALLOY | BLACK E-COAT |
| 8 | CABLE, 16AWG-3 TYPE TC-ER, STOOW | PVC | GRAY |
| 7 | QC SOCKET CONTACT | COPPER ALLOY | GOLD PLATED |
| 6 | QC FEMALE INSERT | TPE (C) | BLACK |
| 5 | QC FEMALE COUPLING NUT | ALUMINUM | CLEAR ANODIZE |
| 4 | QC PIN CONTACT | COPPER ALLOY | GOLD PLATED |
| 3 | QC MALE INSERT | TPE (C) | BLACK |
| 2 | QC MALE COUPLING NUT | ALUMINUM | CLEAR ANODIZE |
| 1 | OVERMOLD | TPE (C) | GRAY |

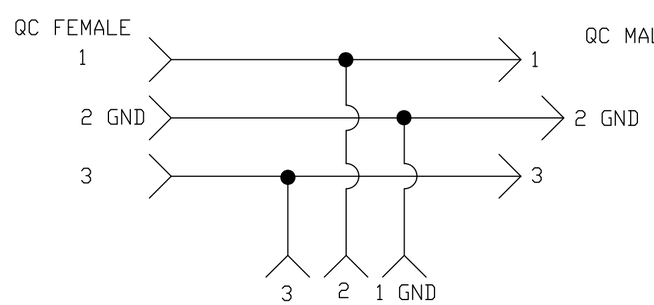

WIRE DIAGRAM

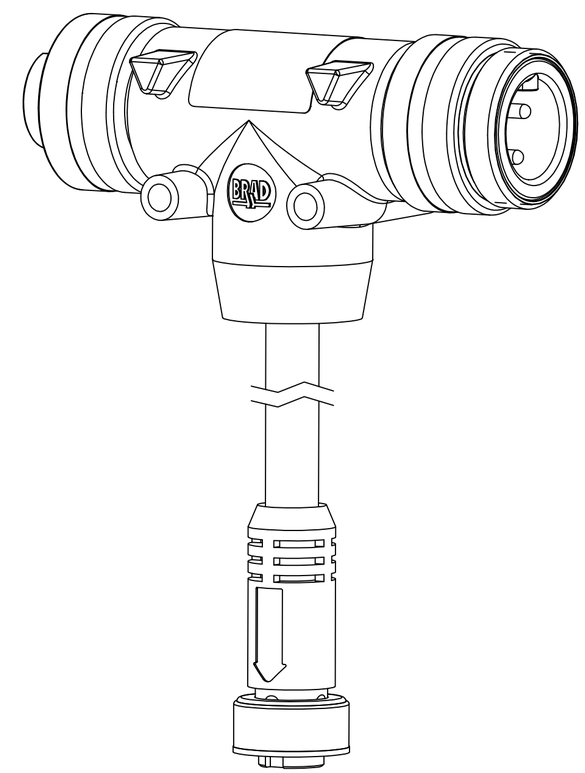

| DOCUMENT STATUS | P1 | RELEASE DATE | 2022/02/02 23:12:56 |
|---|---|---|---|

THIS DRAWING CONTAINS INFORMATION THAT IS PROPRIETARY TO MOLEX ELECTRONIC TECHNOLOGIES, LLC AND SHOULD NOT BE USED WITHOUT WRITTEN PERMISSION

FUNCTIONAL SYMBOLS: FA=0, FC=0, FP=0
DIVISIONAL SYMBOLS

DIMENSION UNITS: INCH/MM
SCALE: NTS

GENERAL TOLERANCES (UNLESS SPECIFIED)

| | mm | INCH |
|---|---|---|
| 4 PLACES | ±---- | ±---- |
| 3 PLACES | ±---- | ±---- |
| 2 PLACES | ±---- | ±---- |
| 1 PLACE | ±---- | ±---- |
| 0 PLACES | ±---- | ±---- |
| ANGULAR TOL ± | ---- ° | |

DRAFT WHERE APPLICABLE MUST REMAIN WITHIN DIMENSIONS

CURRENT REV DESC: INSERT AND O-MOLD CHANGED TO TPE, ADD NOTE 7, DIMS CHANGED T0 IN/MM, ADD LENGTH TOLS

EC NO: 690918
DRWN: RSTONE 2022/01/05
CHK'D: MZIELINSKI 2022/01/27
APPR: BWOODMAN 2022/02/02

INITIAL REVISION:
DRWN: KJOZWIK 2010/01/15
APPR: JFMURPHY 2010/01/20

THIRD ANGLE PROJECTION | DRAWING: C-SIZE | SERIES: 130068

molex

BRAD POWER M35 3 POLE TEE
WITH MINI-CHANGE 3 POLE 16AWG CABLE DROP

PRODUCT CUSTOMER DRAWING

| DOCUMENT NUMBER | DOC TYPE | DOC PART | REVISION |
|---|---|---|---|
| SD-130068-013 | PSD | 001 | C |

| MATERIAL NUMBER | CUSTOMER | SHEET NUMBER |
|---|---|---|
| SEE P/N CHART | GENERAL MARKET | 1 OF 1 |

FORMAT: IN-ACAD-tb-prod-C
REVISION: B
DATE: 2020/01/14