Alle Rechte vorbehalten/ *All rights reserved*

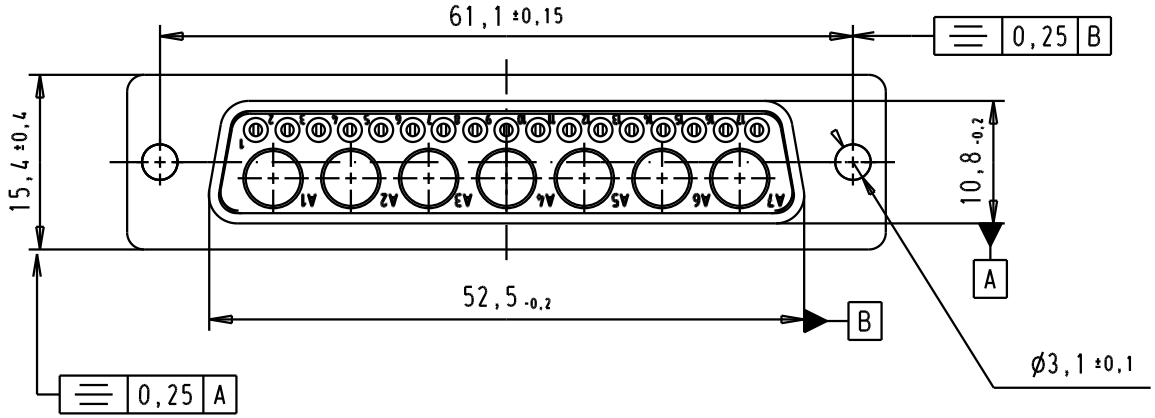

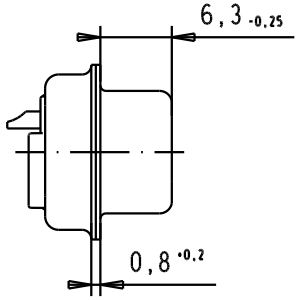

Solder bucket termination for AWG20

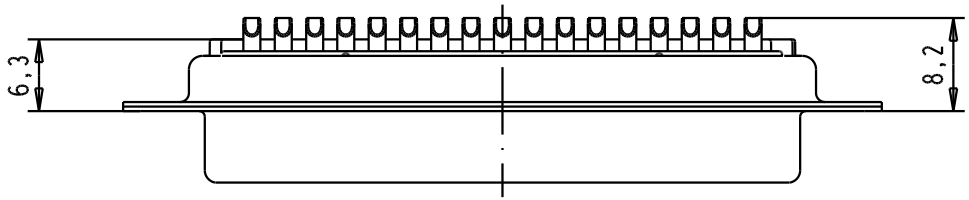

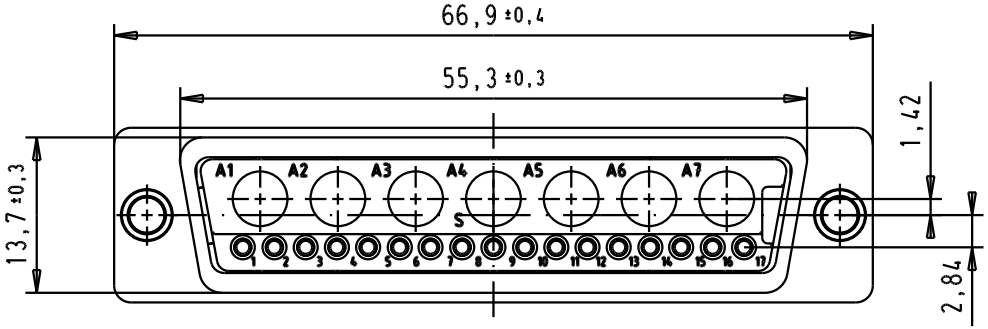

09 69 501 7247	PL3
09 69 501 5247	0,76 µm Au
Part number	Plating

Mod.	Dat.	Name
33421	06/02/06	JMDR
31890	21/04/04	JH

	Dat.	Name
Detail.	21/04/04	JH
Insp.		
Stand.		

All Dim. in mm
Orig. Size DIN A 4

D-sub, female, straight,
24W7 without power contact,
solder buckets,
tin plated shell and holes

Maßstab/ *Scale* 1,5:1

HARTING EURL
F-95972 Paris

TB 09 69 501 x247

Sub.

Blatt/ *Page* 1/1