THIS DRAWING CONTAINS INFORMATION THAT IS PROPRIETARY TO J.S.T. AND SHALL NOT BE USED OR SHOWN WITHOUT WRITTEN PERMISSION.

ITEM	CONNECTOR PART NO.	DESCRIPTION
1	See Table 1	KR CONNECTOR
2	UL1061, 26 AWG	BLUE

IPI CHECK	EOR CHECK

Applicable Tooling
BCD

TABLE 1

ITEM	NUMBER OF CIRCUITS	CONNECTOR PART NO.	ASSEMBLY PART NUMBER	TOTAL WIRE REQUIRED
1	2	02KR-6S-P	A02KR02KR26E51A	101.6 mm
1	3	03KR-6S-P	A03KR03KR26E51A	152.4 mm
1	4	04KR-6S-P	A04KR04KR26E51A	203.2 mm
1	5	05KR-6S-P	A05KR05KR26E51A	254 mm
1	6	06KR-6S-P	A06KR06KR26E51A	304.8 mm
1	7	07KR-6S-P	A07KR07KR26E51A	355.6 mm
1	8	08KR-6S-P	A08KR08KR26E51A	406.4 mm
1	9	09KR-6S-P	A09KR09KR26E51A	457.2 mm
1	10	10KR-6S-P	A10KR10KR26E51A	508 mm
1	11	11KR-6S-P	A11KR11KR26E51A	558.8 mm
1	12	12KR-6S-P	A12KR12KR26E51A	609.6 mm
1	13	13KR-6S-P	A13KR13KR26E51A	660.4 mm
1	14	14KR-6S-P	A14KR14KR26E51A	711.2 mm
1	15	15KR-6S-P	A15KR15KR26E51A	762 mm
1	16	16KR-6S-P	A16KR16KR26E51A	812.8 mm

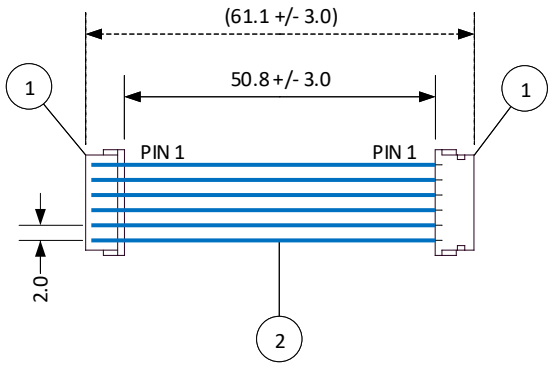

Electrical Specifications
Current: 1.0A AC/DC
Voltage: 100V AC/DC

SCALE	CUSTOMER NAME	CUSTOMER PART NO.
1: 1		

DIMENSIONS: All dimensions are in MM with a tolerance of +/- 3.0 unless otherwise specified.

DESCRIPTION: 2.0 mm Pitch KR Standard Catalog Assembly - 2" Overall Length – Pin out: 1 to 1

DRAWN BY	ASSEMBLY PART NO.
STEVEN PILKINGTON	SEE TABLE 1

CHECKED BY	DRAWING NO. & REVISION	REVISED
JUSTIN BAKER	GAM-022	2/26/2016

REV.	DESCRIPTION	DATE	BY
1	Add electrical specifications	6/27/2018	SP