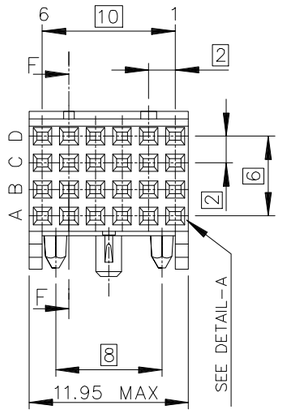

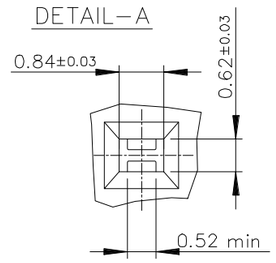

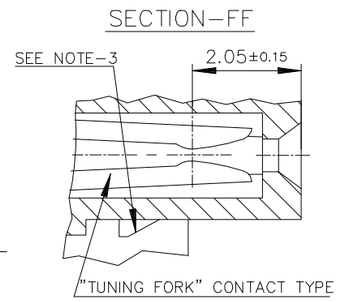

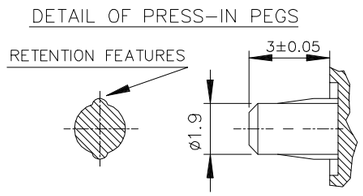

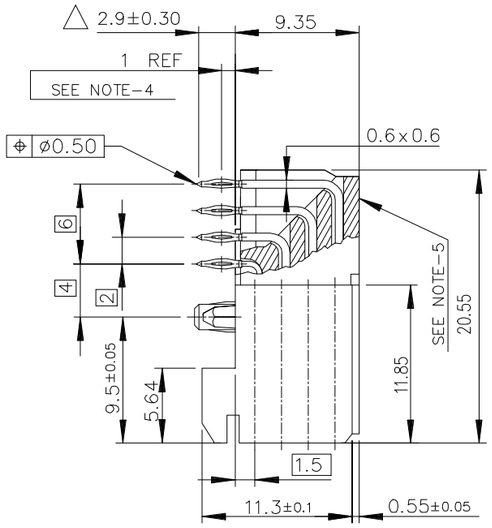

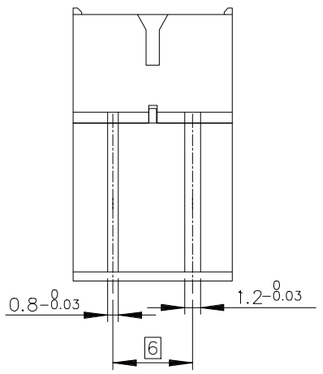

LAYOUT FOR P.C.B

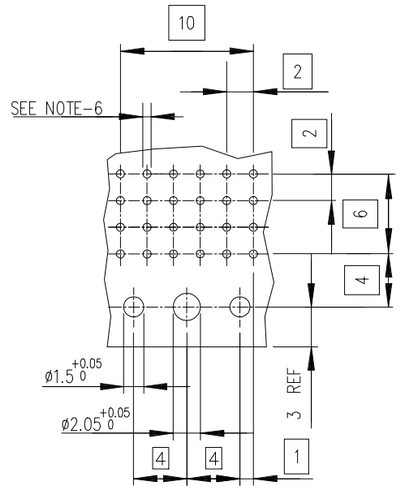

NOTES:

1. MATERIAL : BODY : LCP UL94-V0
   : CONTACT : COPPER ALLOY.
2. FOR PLATING PERFORMANCE REFER DRAWING # 10159409
3. CONNECTORS WITH PCB 2.4mm ARE COMPATIBLE WITH WIDE AND NARROW BODIES.
4. PLUG FOR CODING KEY FIXING.
5. FLAT ROCK INSERTION TOOLING IN PCB, SEE DRW REF : C-8626-1003.
6. METALIZED HOLE DEFINITION , SEE GS-12-447.
7. IF SUFFIX "P" IS ADDED IN P/N PACKAGING IS IN TRAYS BUT CONNECTOR MARKING IS WITHOUT "P" PACKAGING IN TUBE
   EXAMPLE : HM1FXXXXXXXXHxPLF, MARKED HM1FXXXXXXXXHxLF
8. THIS PRODUCT MEETS EUROPEAN UNION DIRECTIVES AND OTHER COUNTRY REGULATIONS AS DESCRIBED IN GS-47- 0004
9. A △ SYMBOL WILL BE NEXT TO ANY DIMENSION, VIEW, OR NOTE WHICH HAS BEEN MODIFIED WITH THE CURRENT DRAWING REVISION.

X-PLATING CODE
REF.DWG. 10159409

PART NUMBER : HM1F41FDP000HxLF

GENERAL CHARACTERISTICS AND ROHS INFORMATIONS:

See PRODUCT SPECIFICATION: GS-12-447

ltr	ecn no	dr	date
G	L06-0159	MLE	2006-10-16
H	L07-0266	MLE	2007-11-06
J	DG10-0039	TER	2010-01-27
K	ELX-I-38656	MINI	2020-10-09
L	ELX-I-42905	NIRMAL	2021-11-12
M	ELX-I-44340	NIRMAL	2022-04-01

dr	CHAMPION	1991-07-30
engr	NIRMAL SAM	2022-04-01
chr	ALEX BABU	2022-04-01
appd	SANOJ P K	2022-04-01

mat'l. code

surface ISO 1302

tolerance ISO 406 ISO 1101

tolerances unless otherwise specified

angles 0°±2°

linear .0±0.3 / .00±0.13 / .000±0.050

projection

MM

scale —

product family: METRAL

title: METRAL FEMALE 4 ROWS 24 CTS
RIGHT ANGLE PRESS-FIT / PRESS-IN PEG

dwg no: C-8626-0064

sheet 1 of 1

size A3

type: Product Customer Drawing

sheet index	revision	M
	sheet	1

© 2016 AFCI