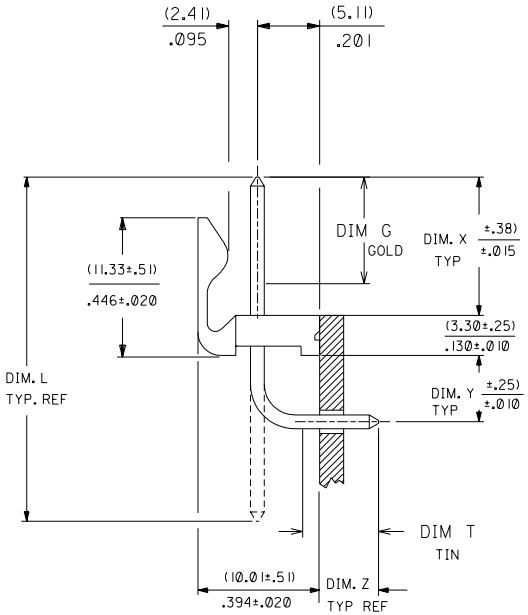

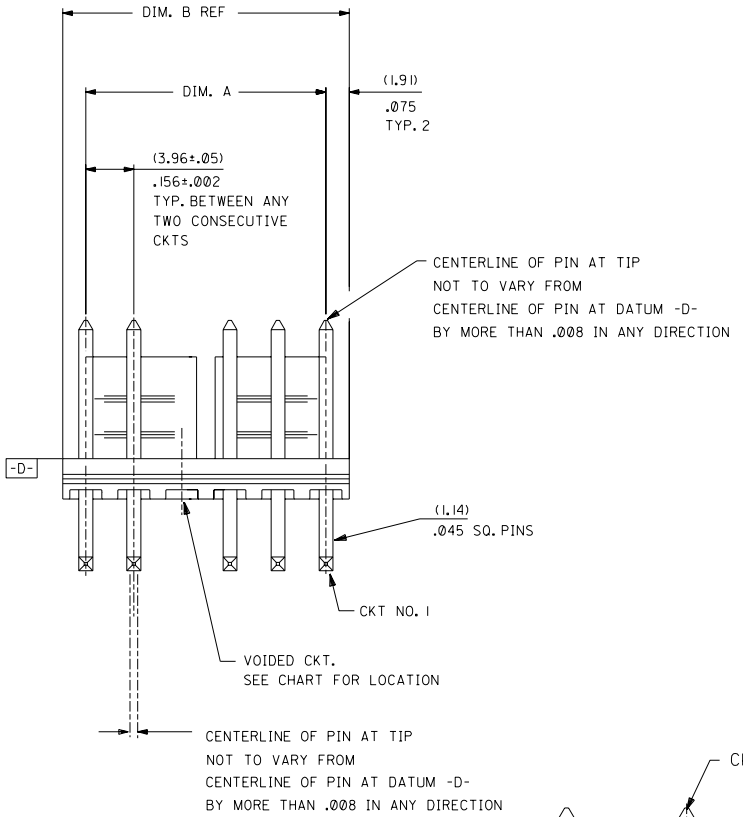

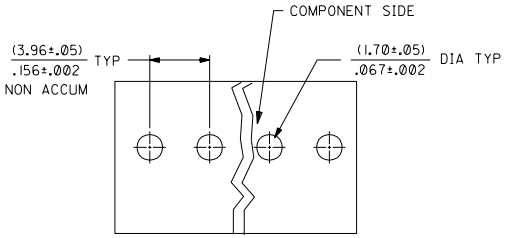

RECOMMENDED PC BOARD HOLE LAYOUT

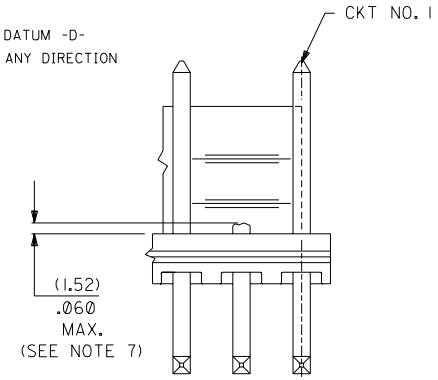

DETAIL A

(OPTIONAL PIN CUT-OFF TYPE VOID)

NO. OF CKT'S.	DIM. A	DIM. B
2	(3.96±.05) / .156±.002	(7.77) / .306
3	(7.92±.08) / .312±.003	(11.73) / .462
4	(11.89±.08) / .468±.003	(15.70) / .618
5	(15.85±.10) / .624±.004	(19.66) / .774
6	(19.81±.10) / .780±.004	(23.62) / .930
7	(23.77±.10) / .936±.004	(27.58) / 1.086
8	(27.74±.13) / 1.092±.005	(31.55) / 1.242
9	(31.70±.13) / 1.248±.005	(35.51) / 1.398
10	(35.66±.13) / 1.404±.005	(39.47) / 1.554
11	(39.62±.15) / 1.560±.006	(43.43) / 1.710
12	(43.59±.15) / 1.716±.006	(47.40) / 1.866
13	(47.55±.15) / 1.872±.006	(51.36) / 2.022
14	(51.51±.18) / 2.028±.007	(55.32) / 2.178
15	(55.47±.18) / 2.184±.007	(59.28) / 2.334
16	(59.44±.18) / 2.340±.007	(63.25) / 2.490
17	(63.40±.20) / 2.496±.008	(67.21) / 2.646
18	(67.36±.20) / 2.652±.008	(71.17) / 2.802

NOTES:

1. * PRECEDING ENG. NO. IN CHART DESIGNATES STANDARD PRODUCT.
2. SOLDERABILITY: WHEN PARTS ARE SOLDERED AT A TEMPERATURE OF 230°C (446°F) FOR 5 SECONDS, EACH SOLDERED SURFACE SHALL BE A MINIMUM OF 95% COVERED WITH A SMOOTH CONTINUOUS ADHERENT COATING. FOR OTHER INFORMATION SEE ES-152.
3. PIN PUSH OUT FORCE: PRIOR TO SOLDERING, A 3 POUND MINIMUM FORCE (IN EITHER DIRECTION) SHALL BE REQUIRED TO PUSH THE PIN OUT OF THE HEADER.
4. FOR ADDITIONAL INFORMATION AND TESTING PROCEDURES SEE PS-08-50.
5. PARTS ARE STACKABLE END TO END ON (3.96)/.156 CENTERS.
6. FOR PART WITH PEGS SEE DWG NO. SDA-42492
7. BURRS DUE TO CUTTING OFF OF PINS MUST NOT VARY FROM CENTERLINE OF PIN AT DATUM -D- BY MORE THAN .008 IN ANY DIRECTION.

MATERIAL: HEADER: GLASS FILLED POLYESTER, 94V-0, MOLDED NATURAL (WHITE).
PIN: BRASS

PLATINGS:

(102) ELECTRO TIN .000450/.000200 OVER .000200/.000100 COPPER
(567) SELECT GOLD 15 M.I. MIN, SELECT TIN/LEAD 100 M.I. MIN., OVER NICKEL
(569) SELECT GOLD 30 M.I. MIN, SELECT TIN/LEAD 100 M.I. MIN., OVER NICKEL
FOR ADDITIONAL INFORMATION SE SDES-88.

LTR.	REVISIONS	LTR.	REVISIONS
		E2	REL SHT 5 UCP2003-0755 11/6/2002 SAMIEC
		E1	REL SHT 4 UCR2002-0555 12/17/01 SAMIEC
		E	ADD PACK SPEC UCR2002-0087 7/26/01 SAMIEC

DIMENSIONS SHOWN (METRIC) INCH
UNLESS OTHERWISE SPECIFIED TOLERANCES: ANGULAR ± 1/2°

	INCH	METRIC
3 PLACE	±	
2 PLACE	±	±
1 PLACE		±

DRAFT WHERE APPLICABLE MUST REMAIN WITHIN DIMENSIONS

DRWG. BY SAMIEC | CHK'D. BY PATEL
APP'D. BY LENZ | SCALE :

MFG.	SH.	REV.
6	E	
5	E2	
4	E1	
3	E	
2	E	
1	E2	

▽ = 0 ▼ = 0 REVISE ONLY ON CAD SYSTEM

TITLE
FRICTION LOCK HEADER ASS'Y
.156 ℄ BENT SQ PINS, W/O PEGS
41792 SERIES DWG.

MOLEX INCORPORATED
LISLE, ILL. 60532 U.S.A.

SHEET NO. 1 OF 6 | DATE 09/09/87

PART NO. SEE CHART | DRWG. NO. SDA-41792

FILE NAME S41792X1

THIS DRAWING CONTAINS INFORMATION THAT IS PROPRIETARY TO MOLEX INC. AND SHOULD NOT BE USED WITHOUT WRITTEN PERMISSION.

DIV. KK | SIZE C

ENG. NO.	HEADER NO.	PIN NO.	PLATING	DIM. L	DIM. X	DIM. G GOLD	DIM. Y	DIM. Z	DIM. T TIN	DIM. W	NO OF CKTS	VOID CKTS	PACKAGING
A-41792-0198/0213	41790-0002/0018	2161-37(102)	102	(27.94) 1.100	(11.43) .450	( ) N/A	(5.41) .213	(3.96) .156	( ) OVERALL	90°	3-18	2	BULK PER PK-41792-002
A-41792-0214/0227	41790-0002/0018	2161-37(102)	102	(27.94) 1.100	(11.43) .450	( ) N/A	(5.41) .213	(3.96) .156	( ) OVERALL	90°	5-18	5	BULK PER PK-41792-002
A-41792-0242/0257	41790-0002/0018	2161-37(102)	102	(27.94) 1.100	(11.43) .450	( ) N/A	(5.41) .213	(3.96) .156	( ) OVERALL	90°	3-18	3	BULK PER PK-41792-002
A-41792-0258/0274	41790-0002/0018	2161-64(122)	122	(29.85) 1.175	(13.28) .523	( ) N/A	(5.41) .213	(4.01) .158	( ) OVERALL	90°	2-18		BULK PER PK-41792-002
A-41792-0275/0289	41790-0002/0018	2161-37(102)	102	(27.94) 1.100	(11.43) .450	( ) N/A	(5.41) .213	(3.96) .156	( ) OVERALL	90°	4-18	2,4	BULK PER PK-41792-002
A-41792-0341/0352	41790-0002/0018	2161-37(102)	102	(27.94) 1.100	(11.43) .450	( ) N/A	(5.41) .213	(3.96) .156	( ) OVERALL	90°	7-18	7	BULK PER PK-41792-002

A-41792-0198/0213			A-41792-0214/0227			A-41792-0242/0257			A-41792-0258/0274			A-41792-0275/0289			A-41792-0341/0352		
EDP NO.	ENG. NO.	NO OF CKTS	EDP NO.	ENG. NO.	NO OF CKTS	EDP NO.	ENG. NO.	NO OF CKTS	EDP NO.	ENG. NO.	NO OF CKTS	EDP NO.	ENG. NO.	NO OF CKTS	EDP NO.	ENG. NO.	NO OF CKTS
		2			2			2	26-62-5023	A-41792-0258	2			2			2
26-62-5031	A-41792-0198	3			3	26-62-5035	A-41792-0242	3	26-62-5033	A-41792-0259	3			3			3
26-62-5041	A-41792-0199	4			4	26-62-5045	A-41792-0243	4	26-62-5043	A-41792-0260	4	26-62-5047	A-41792-0275	4			4
26-62-5051	A-41792-0200	5	41792-0214	A-41792-0214	5	26-62-5055	A-41792-0244	5	26-62-5053	A-41792-0261	5	26-62-5057	A-41792-0276	5			5
26-62-5061	A-41792-0201	6	26-62-5060	A-41792-0215	6	26-62-5065	A-41792-0245	6	26-62-5063	A-41792-0262	6	26-62-5067	A-41792-0277	6			6
26-62-5071	A-41792-0202	7	41792-0216	A-41792-0216	7	26-62-5075	A-41792-0246	7	26-62-5073	A-41792-0263	7	26-62-5077	A-41792-0278	7	41792-0341	A-41792-0341	7
26-62-5081	A-41792-0203	8	41792-0217	A-41792-0217	8	26-62-5085	A-41792-0247	8	26-62-5083	A-41792-0264	8	26-62-5087	A-41792-0279	8	41792-0342	A-41792-0342	8
26-62-5091	A-41792-0204	9	41792-0218	A-41792-0218	9	26-62-5095	A-41792-0248	9	26-62-5093	A-41792-0265	9	26-62-5097	A-41792-0280	9	41792-0343	A-41792-0343	9
26-62-5101	A-41792-0205	10	26-62-5100	A-41792-0219	10	26-62-5105	A-41792-0249	10	26-62-5103	A-41792-0266	10	26-62-5107	A-41792-0281	10	26-62-5104	A-41792-0344	10
26-62-5111	A-41792-0206	11	41792-0220	A-41792-0220	11	26-62-5115	A-41792-0250	11	26-62-5113	A-41792-0267	11	26-62-5117	A-41792-0282	11	26-62-5114	A-41792-0345	11
26-62-5121	A-41792-0207	12	41792-0221	A-41792-0221	12	26-62-5125	A-41792-0251	12	26-62-5123	A-41792-0268	12	26-62-5127	A-41792-0283	12	41792-0346	A-41792-0346	12
26-62-5131	A-41792-0208	13	41792-0222	A-41792-0222	13	26-62-5135	A-41792-0252	13	26-62-5133	A-41792-0269	13	26-62-5137	A-41792-0284	13	41792-0347	A-41792-0347	13
26-62-5141	A-41792-0209	14	41792-0223	A-41792-0223	14	26-62-5145	A-41792-0253	14	26-62-5143	A-41792-0270	14	26-62-5147	A-41792-0285	14	41792-0348	A-41792-0348	14
26-62-5151	A-41792-0210	15	41792-0224	A-41792-0224	15	26-62-5155	A-41792-0254	15	26-62-5153	A-41792-0271	15	26-62-5157	A-41792-0286	15	41792-0349	A-41792-0349	15
26-62-5161	A-41792-0211	16	41792-0225	A-41792-0225	16	26-62-5165	A-41792-0255	16	26-62-5163	A-41792-0272	16	26-62-5167	A-41792-0287	16	41792-0350	A-41792-0350	16
26-62-5171	A-41792-0212	17	41792-0226	A-41792-0226	17	26-62-5175	A-41792-0256	17	26-62-5173	A-41792-0273	17	26-62-5177	A-41792-0288	17	41792-0351	A-41792-0351	17
26-62-5181	A-41792-0213	18	41792-0227	A-41792-0227	18	26-62-5185	A-41792-0257	18	26-62-5183	A-41792-0274	18	26-62-5187	A-41792-0289	18	41792-0352	A-41792-0352	18

	SEE SHEET 1	B14	SEE SHEET 1
E1	SEE SHEET 1	B10	SEE SHEET 1
E	SEE SHEET 1	B9	SEE SHEET 1
C	SEE SHEET 1	B8	SEE SHEET 1
B18	SEE SHEET 1	B6	SEE SHEET 1
B17	SEE SHEET 1	B5	SEE SHEET 1
B15	SEE SHEET 1	B4	SEE SHEET 1
LTR.	REVISIONS	LTR.	REVISIONS

DIMENSIONS SHOWN (METRIC) INCH

UNLESS OTHERWISE SPECIFIED TOLERANCES: ANGULAR ± 1/2°

	INCH	METRIC
3 PLACE	±	
2 PLACE	±	±
1 PLACE		±

DRAFT WHERE APPLICABLE MUST REMAIN WITHIN DIMENSIONS

DRWG. BY SAMIEC | CHK'D. BY PATEL
APP'D. BY LENZ | SCALE :

▽ = 0 ▼ = 0 **REVISE ONLY ON CAD SYSTEM**

TITLE FRICTION LOCK HEADER ASSY .156 ℄ BENT SQ PINS, W/O PEG 41792 SERIES DWG

MOLEX INCORPORATED LISLE, ILL. 60532 U.S.A.

SHEET NO. 4 | DATE 06/25/88

PART NO. SEE CHART | DRWG. NO. SDA-41792

FILE NAME S41792X4

THIS DRAWING CONTAINS INFORMATION THAT IS PROPRIETARY TO MOLEX INC. AND SHOULD NOT BE USED WITHOUT WRITTEN PERMISSION.

DIV. C | SIZE C

41792