SIGN	DATE	DESCRIPTION	APPROVER
⚠1	04/06'10	Add the 2P mark & Wire strip length is changed	RUNNER

THIS IS CAD DRAWING, DO NOT REVISE MANUALLY!!!

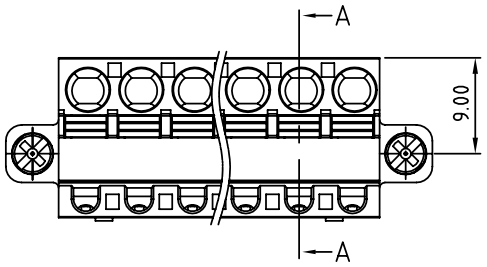

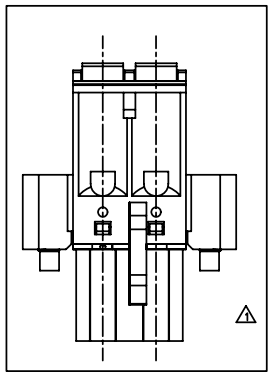

2P mark

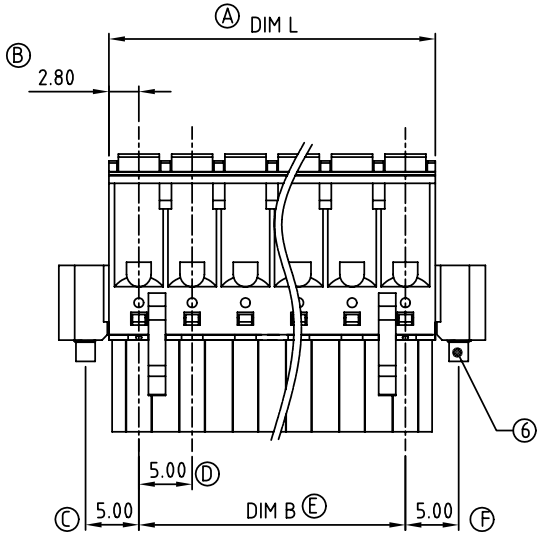

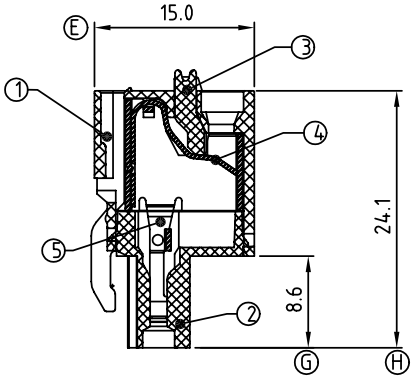

SECTION A-A

Material

- Item 1 Insulating top body Thermoplastic (UL94V-0)
- Item 2 Insulating down body Thermoplastic (UL94V-0)
- Item 3 Insulating lever Thermoplastic (UL94V-0)
- Item 4 Wire guard Stainless Steel
- Item 5 Contaits PIN PhBz (CuSn) Tin plated
- Item 6 Wigh flange screw Steel "+/-"type Zinc plating M2.5

Electrical cULus

- Voltage rating: 300V
- Current rating: 10A
- Solid wire(AWG): 12-26
- Stranded wire(AWG): 12-26
- ⚠1 Wire strip length: 9-10mm
- Withstanding Voltage: 1.6KV
- Operating temperature: -40°C to +115°C

HW xx 70 x 3 xxxx G

xx		x		xxxx		G
02	2 CONTACTS	0	Black	0000	Standard @ Logo	RoHS
03	3 CONTACTS	5	Green	000A	Standard ANY Logo	Pb<40,000ppm
...	...	6	Blue	Any special item by customer request, please contact sales department.		
24	24 CONTACTS	8	Grey			

Poles	02	03	04	05	06	07	08	09	10	11	12	13
Dim L	10.60	15.60	20.60	25.60	30.60	35.60	40.60	45.60	50.60	55.60	60.60	65.60
Dim B	5.00	10.00	15.00	20.00	25.00	30.00	35.00	40.00	45.00	50.00	55.00	60.00
TOL	±0.15					±0.20						±0.25

Poles	14	15	16	17	18	19	20	21	22	23	24
Dim L	70.60	75.60	80.60	85.60	90.60	95.60	100.60	105.60	110.60	115.60	120.60
Dim B	65.00	70.00	75.00	80.00	85.00	90.00	95.00	100.0	105.0	110.0	115.0
TOL	±0.25					±0.30					

ANYTEK

CUSTOMER COPY

ALL RIGHTS RESERVED. REPRODUCTION OR ISSUE TO THIRD PARTIES IN ANY FORM WHATEVER IS NOT PERMITTED WITHOUT WRITTEN AUTHORITY FROM THE PROPRIETOR. PROPERTY OF ANYTEK TECHNOLOGY CO., LTD

TITLE	HW 5.0 Series With Flange (Contact on up side)				
PART NO.	HWxx70x3xxxxG			DWG NO.	8HW0702
APPROVED	CHECKED	DESIGNED	DRAWN	CUST NO.	
		Runner 2010.04.06	Runner 2010.04.06	SHEET: 01/01	UNIT: mm / SCALE: NONE / REV.: C

Tolerance	
X.	±0.50
X.X	±0.30
X.XX	±0.10
X°	±1°