THIS DRAWING IS UNPUBLISHED. RELEASED FOR PUBLICATION
© COPYRIGHT - BY TYCO ELECTRONICS CORPORATION. ALL RIGHTS RESERVED.

| LOC | DIST |
|---|---|
| CM | 00 |

REVISIONS

| ZP | LTR | DESCRIPTION | DATE | DWN | APVD |
|---|---|---|---|---|---|
| | F | REV PER EC 0G3B-0388-03 | 24JUL03 | SC | CJ |

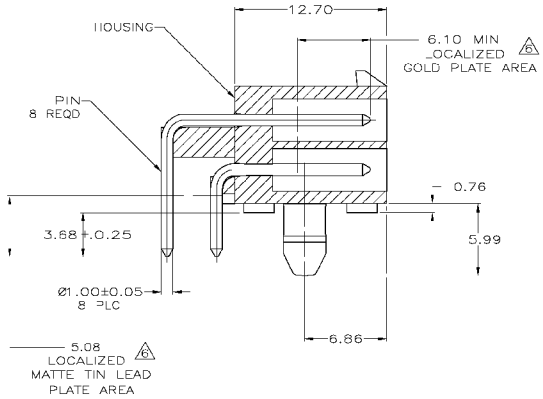


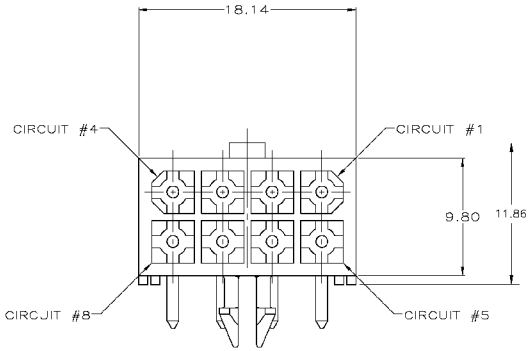


1. PINS TO COMPLY WITH AMP SOLDERABILITY SPEC 109-11-3.
2. MATES WITH PLUG P/N 770579-1.
3. COORDINATE DIMENSION APPLIES FROM CENTER OF ACTUAL FEATURE.
4. RECOMMENDED FOR EDGE MOUNTING.
5. 0.00381 MIN MATTE TIN LEAD OVER 0.00127 MIN NICKEL ENTIRE LENGTH OF PIN.
6. 0.00076 MIN GOLD PLATE IN THE LOCALIZED PLATE AREA, 0.00381 MIN MATTE TIN LEAD IN THE LOCALIZED PLATE AREA, BOTH OVER 0.00127 MIN NICKEL.
7. 0.00381 MIN MATTE TIN OVER 0.00127 MIN NICKEL ENTIRE LENGTH OF PIN.

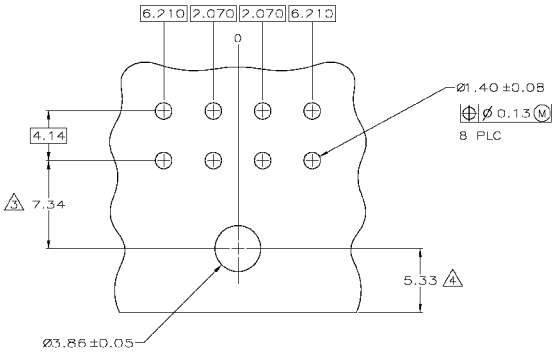


RECOMMENDED MOUNTING HOLE PATTERN
FOR 1.57 THICK P.C. BOARD

| MM | IN | MM | IN |
|---|---|---|---|
| 3.68 | .145 | – | – |
| 2.070 | .0815 | 18.14 | .714 |
| 1.57 | .062 | 12.70 | .500 |
| 1.40 | .055 | 9.80 | .386 |
| 1.00 | .039 | 7.34 | .289 |
| 0.76 | .030 | 6.86 | .270 |
| 0.25 | .010 | 6.210 | .2445 |
| 0.13 | .005 | 6.10 | .240 |
| 0.08 | .003 | 5.99 | .236 |
| 0.05 | .002 | 5.33 | .210 |
| 0.00381 | .000150 | 5.08 | .200 |
| 0.00127 | .000050 | 4.14 | .163 |
| 0.00076 | .000030 | 3.86 | .152 |

CONVERSION TABLE

| MATERIAL | FINISH | MATERIAL | COLOR | PART NO. |
|---|---|---|---|---|
| BRASS | 7 | NYLON, UL94V-0 | WHITE | 1-770970-0 |
| BRASS | 6 | NYLON, UL94V-0 | WHITE | 770970-2 |
| BRASS | 5 | NYLON, UL94V-0 | WHITE | 770970-1 |
| PIN | | HOUSING | | |

METRIC

THIS DRAWING IS A CONTROLLED DOCUMENT.

DIMENSIONS: INCHES
TOLERANCES UNLESS OTHERWISE SPECIFIED:
0 PLC ±
1 PLC ±
2 PLC ±
3 PLC ± 0.13
4 PLC ±
ANGLES ±

MATERIAL SEE TABLE
FINISH SEE TABLE

DWN S. CARPENTER 24JUL2003
CHK C. JONES 24JUL2003
APVD C. JONES 24JUL2003
PRODUCT SPEC
APPLICATION SPEC
WEIGHT
CUSTOMER DRAWING

tyco Electronics
Tyco Electronics Corporation
Harrisburg, PA 17105

NAME
HEADER ASSEMBLY, RIGHT ANGLE, WITH SHORT PEG, 8 CIRCUIT, MINI UNIVERSAL MATE-N-LOK™

SIZE A1 CAGE CODE 00779 DRAWING NO C-770970 REPLACES TO —

SCALE 5:1 SHEET 1 OF 1 REV F

AMP 4806 REV 31MAR2003

2D
H:\DMMod\