THIS DRAWING IS UNPUBLISHED. RELEASED FOR PUBLICATION ,19 .
© COPYRIGHT 19 BY AMP INCORPORATED. ALL RIGHTS RESERVED.

LOC	DIST
AA	22

REVISIONS

P	LTR	DESCRIPTION	DATE	DWN	APVD
	C	REV; EC 0502-0432-97	30JUL97	DLD	JT

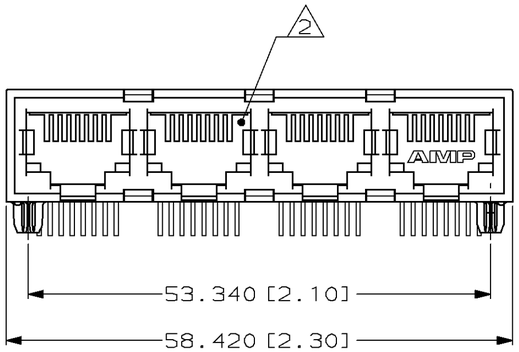

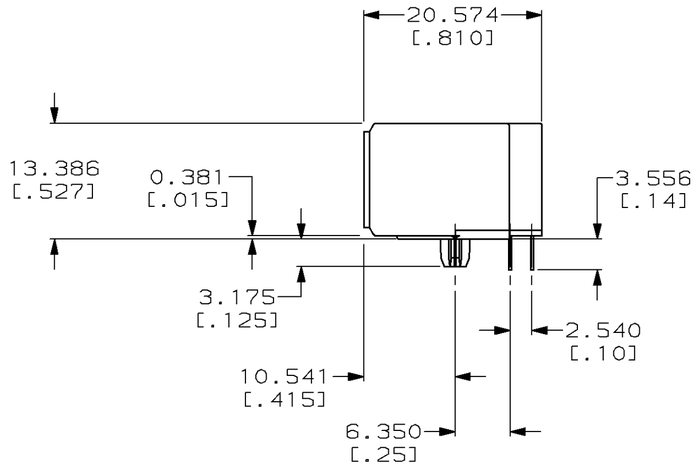

1. MATERIAL: HOUSING - HTN NYLON, BLACK, IR COMPATIBLE, UL 94V-0. TERMINALS - 0.33[.013] THICK PHOS BRONZE PLATED WITH 1.27øm[.000050] MINIMUM HARD GOLD ON LOCALIZED AREA AND 3.81øm [.000150] MINIMUM TIN-LEAD IN SOLDER AREA OVER 1.27µm [.000050] MINIMUM NICKEL UNDERPLATE.

2. JACK CAVITY CONFORMS TO FCC RULES AND REGULATIONS, PART 68 SUBPART F.

3. ALL DIMENSIONS ARE NOMINAL UNLESS OTHERWISE SPECIFIED.

4. CAUTION: CATEGORY 5 JACK SOLDER TAIL POSITIONS DO NOT FOLLOW SAME NUMBER SEQUENCE AS THAT OF THE TRADITIONAL JACKS.

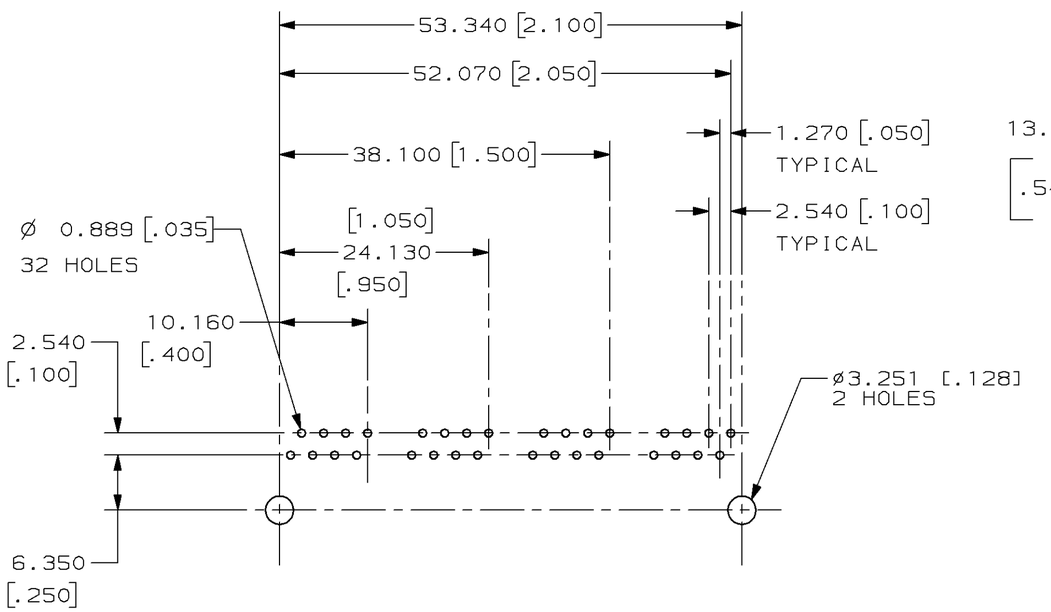

SUGGESTED PC BOARD LAYOUT
COMPONENT SIDE
SEE APPLICATION SPECIFICATION

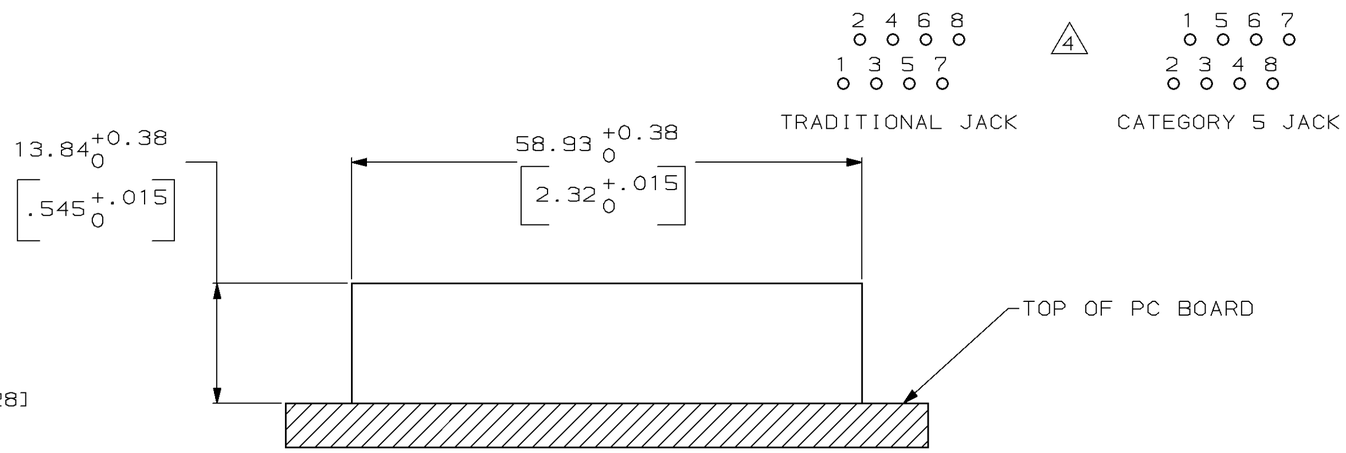

SUGGESTED PANEL CUTOUT

558500

558500-1
PART NO.

THIS DRAWING IS A CONTROLLED DOCUMENT FOR AMP INCORPORATED. IT IS SUBJECT TO CHANGE AND THE CONTROLLING ENGINEERING ORGANIZATION SHOULD BE CONTACTED FOR THE LATEST REVISION.

DIMENSIONS: mm [INCHES]

TOLERANCES UNLESS OTHERWISE SPECIFIED:
0 PLC ±-
1 PLC ±-
2 PLC ±0.254 [.01]
3 PLC ±0.127 [.005]
4 PLC ±-
ANGLES ±-

MATERIAL 1
FINISH 1

DWN	W. LONG	3-8-94
CHK	B. FOX	3-16-94
APVD	G. REED	3-16-94
PRODUCT SPEC	108-1392	
APPLICATION SPEC	114-2048	
WEIGHT	-	

CUSTOMER DRAWING

AMP Incorporated
Harrisburg, PA 17105-3608

NAME: MODULAR JACK ASSEMBLY, 4 PORT, 8 POSITION, RIGHT ANGLE, CATEGORY 5

SIZE	CAGE CODE	DRAWING NO	SCALE	SHEET	REV
A2	00779	C-558500	2:1	1 OF 1	C

AMP 1471-9 REV 09MAY94