RoHS

10G BASE-T LAN Filter Module

A10GS-4396S

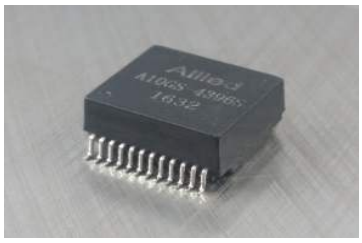

- 10 Gigabit for LAN / WAN Ethernet applications
- Designed to meet IEEE802.3
- Maximum Reflow Temp. 250°
- Operating Temperature Range: 0ºC to +70ºC

Electrical Specifications @ 25°C

Part Number	OCL(µH Min) @ 100KHz, 0.1V	Turns Ratio (±3%)	Insertion Loss (dB Max)		Return Loss (Z OUT=100Ω±1%)	
			100KHz	1-500MHz	1-40MHz	40-500MHz
A10GS-4396S	200	1CT:1CT	-3.0	-1.0	-18dB Min	-17+10*LOG(f/40)

Electrical Specifications @ 25°C

Part Number	Common Mode Rejection (dB Min)			Differential Common Mode Rejection (dB Min)		Cross Talk (dB Min)		Isolation HI-POT (Vrms)
	1-100MHz	100-300MHz	360-500MHz	1-250MHz	250-500MHz	1-100MHz	100-500MHz	
A10GS-4396S	-35	-30	-25	-30	-22	-40	-30	1500 Min

All specifications subject to change without notice.

MECHANICAL

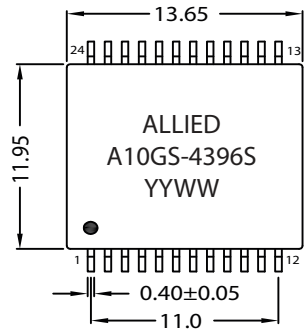

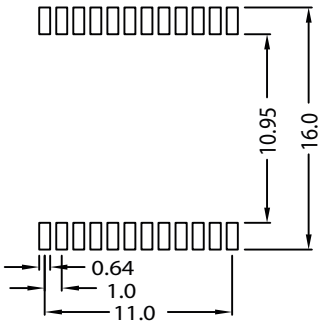

SUGGESTED PAD LAYOUT

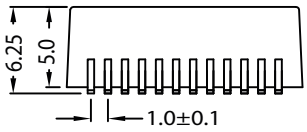

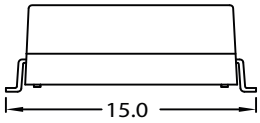

Dimensions: mm
Unless otherwise specified, all tolerances are ±0.25
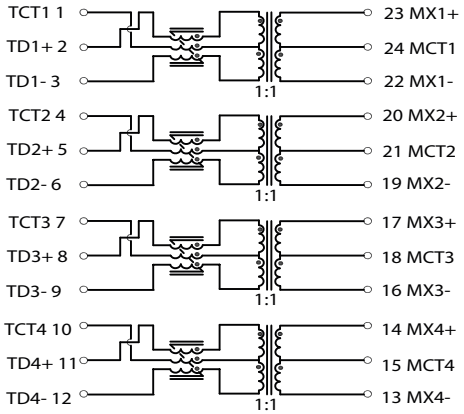
SCHEMATICS