LENGTH TABLE	
PART NUMBER	LENGTH (METERS)
AT04GY-2P-N-TPE-M1	1 (3.28FT)
AT04GY-2P-N-TPE-M2	2 (6.56FT)
AT04GY-2P-N-TPE-M4	4 (13.12FT)
AT04GY-2P-N-TPE-M5	5 (16.40FT)
AT04GY-2P-N-TPE-M10	10 (32.80FT)

REVISIONS						
REV	ZONE	ECO	DESCRIPTION	DATE	BY	APPR
A1	–	–	RELEASED	3/10/2021	RO	WS

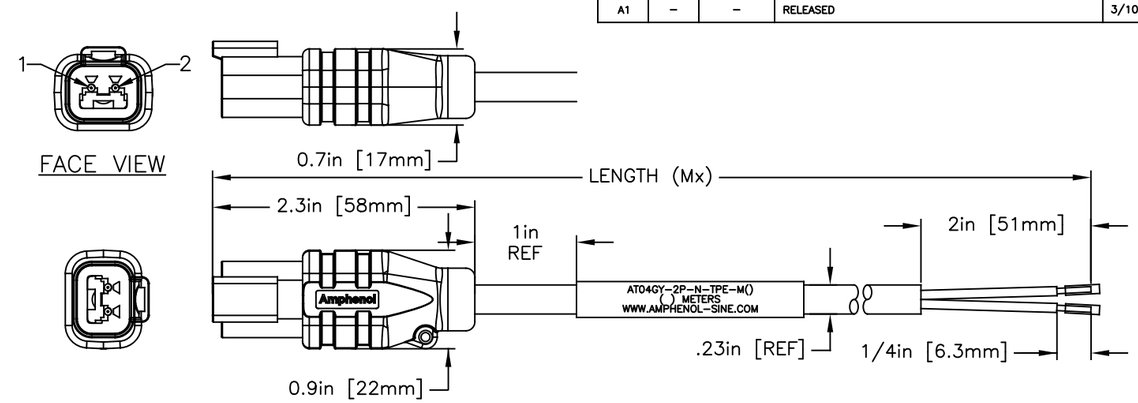

AT04GY-2P-N-TPE-M2

CONNECTOR TYPE
AT - Amphenol AT Connector
PLEASE CONTACT CSR FOR ADDITONAL AVAILABLE OPTIONS

DESIGN
04 Male Connector
06 Female Connector

POSITIONS
2 2 Pin
3 3 Pin
4 4 Pin
6 6 Pin
8 8 Pin
12 12 Pin

DESIGN
S Female Connector
P Male Connector

COLORS
GY - GRAY
BK - BLACK
BN - BROWN
YL - YELLOW
RD - RED
GN - GREEN
WT - WHITE
BL - BLUE
ORG - ORANGE

CABLE LENGTH (M = METERS)
1 = 1M
2 = 2M
4 = 4M
5 = 5M
10 = 10M
CUSTOM CABLE LENGTH OPTIONS AVAILABLE. CONTACT CSR.

CABLE TYPE
TPE - TPE, BLACK

LED/SUPPRESSOR CIRCUIT
N - NONE
S - LED/SUPPRESSOR DIODE(2POSITION)

NOTE: 8 & 12 WAY ARE ONLY AVAILABLE IN STANDARD KEY/COLOR CONFIGURATIONS.
KEY A - GRAY
KEY B - BLACK
KEY C - GREEN
KEY D - BROWN

WIRING DIAGRAM

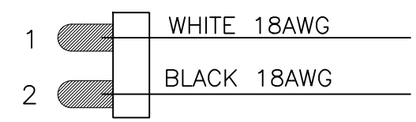

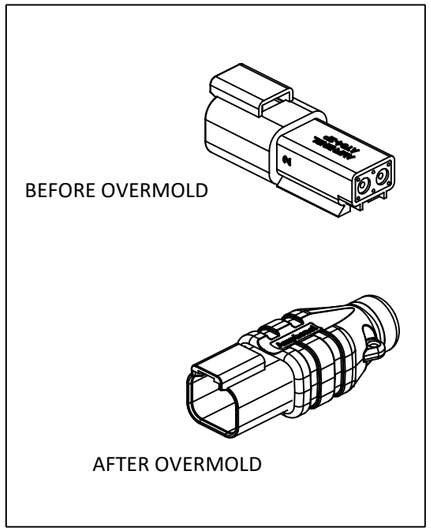

NOTES: UNLESS OTHERWISE SPECIFIED

1. MATERIAL:
   HOUSING: PA66
   SEAL: SILICONE RUBBER

2. MODIFICATIONS: OVERMOLDED

3. SPECIFICATIONS:
   3.1 CURRENT RATING: 15AMPS - 300V AC/DC
   3.2 OVERMOLDED ASY OPERATING TEMPERATURE: -40C TO +100C
   3.3 DIELECTRIC WITHSTANDING VOLTAGE: LESS THAN 2 MILLIAMPS CURRENT LEAKAGE @ 1500 VOLTS AC.
   3.4 INSULATION RESISTANCE: 1000 MEGAOHMS MIN @ 25C
   3.5 MOISTURE RESISTANCE: IP68 MATED CONDITION (1M OF WATER FOR 24 HOURS).
   3.6 MATING CYCLE DURABILITY: 100 CYCLES
   3.7 RoHS COMPLIANT

4. CABLE SPECIFICATIONS:
   COMPONENTS: TWO 18AWG, SRPVC INSULATED CONDUCTORS 41/34 BARE COPPER.
   CONDUCTOR INSULATION: SRPVC (SEE COLOR CODE)
   PAIR TWIST: 2 CONDUCTORS CABLED TOGETHER WITH FRPP FILLERS
   BINDER: FLEECE TAPE
   JACKET: TPE, BLACK
   PRINT: AMPHENOL SINE SYSTEMS KA-56764-2 2C 18AWG (UL FILE NUMBER) RU AWM 21270 105C 600V --- (CSA FILE NUMBER) CSA AWM I/II A/B -40C TO +105C 600V FT4 APPROVALS: AWM 21270, CSA AWM I/II A/B FT4, SUNLIGHT RESISTANT, OIL R ESISTANT, MATERIALS ARE RoHS 3 COMPLIANT.

5. MATING PART: AT06-2S* PLUG
   (* = MODIFICATIONS AND COLORS)

6. ALL DIMENSIONS ARE FOR REFERENCE USE ONLY.

QUANTITY	PART NUMBER	DESCRIPTION	ITEM

MATERIALS LIST

UNLESS OTHERWISE SPECIFIED
1) All dimensions are in metric(mm).
2) Tolerances are as follows:
1 PL DEC ±0.30
2 PL DEC ±0.15
3 PL DEC ±0.08
Fractions ±1/64
Angles ±1°
3) Note reference = X

MATERIAL SPECIFICATIONS:

PROCESS SPECIFICATIONS:

NEXT ASS'Y:

SIGNATURES		DATE
DRAWN:	RO	11/5/2020
CHECKED:	WS	1/15/2021
ENGINEER:	RO	
APPROVAL:	WS	1/15/2021
CUSTOMER:		

THIS DRAWING IS SUPPLIED FOR INFORMATION ONLY. DESIGN FEATURES, SPECIFICATIONS AND PERFORMANCE DATA SHOWN HEREON ARE THE PROPERTY OF THE AMPHENOL CORPORATION. NO RIGHTS OF REPRODUCTION ARE IMPLIED. ALL DIMENSIONS ARE SUBJECT TO NORMAL MANUFACTURING VARIATIONS.

Amphenol

Sine Systems - www.amphenol-sine.com
44724 Morley Drive
Clinton Township, MI 48036

2 POS RECEP MOLDED, BLK TPE, SNGL ENDED CBL ASSY, AMPHENOL AT CONN AT04-2P

SIZE: C | TYPE: C- | DWG NO: AT04GY-2P-N-TPE-Mx | REVISION: A1

SCALE: NONE | AT04GY-2P-N-TPE-Mx | SHEET 1 OF 1

TITLE:
DWG NO:
REV:
SH:
OF: