THIS DRAWING IS UNPUBLISHED. RELEASED FOR PUBLICATION -.-. -
© COPYRIGHT - By - ALL RIGHTS RESERVED.

LOC	DIST
AA	22

REVISIONS

P	LTR	DESCRIPTION	DATE	DWN	APVD
	E2	REVISED PER ECO-11-005140	25MAR11	RK	HMR
	F	ECO-11-014917	30MAY2011	EL	LR

MECHANICAL:

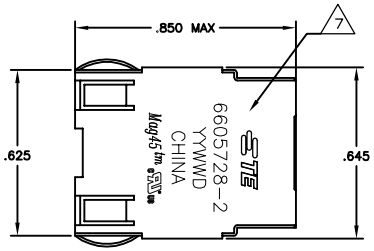

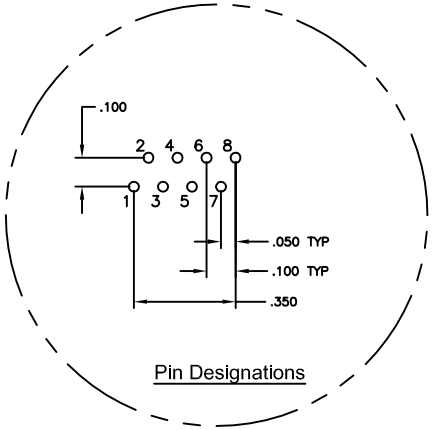

Pin Designations

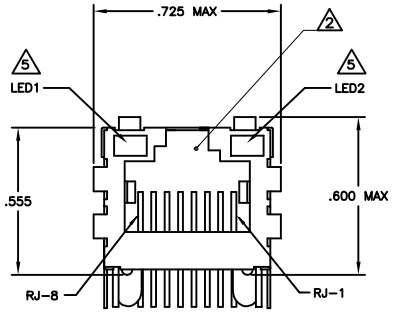

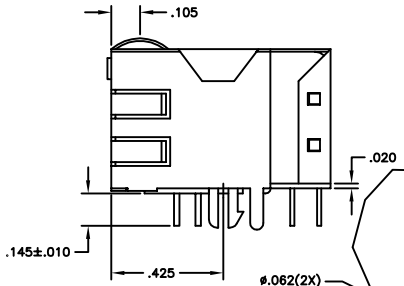

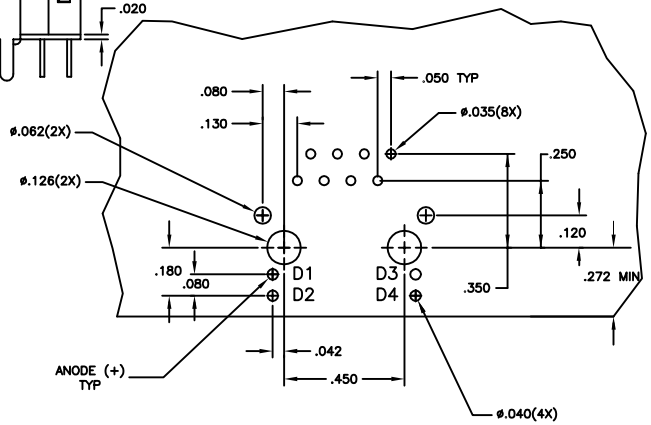

Suggested PCB Layout

(Component Side)

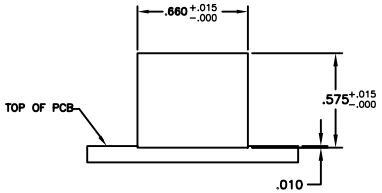

Suggested Panel Cutout

717 SERIES MAGNETIC CIRCUIT 3 6

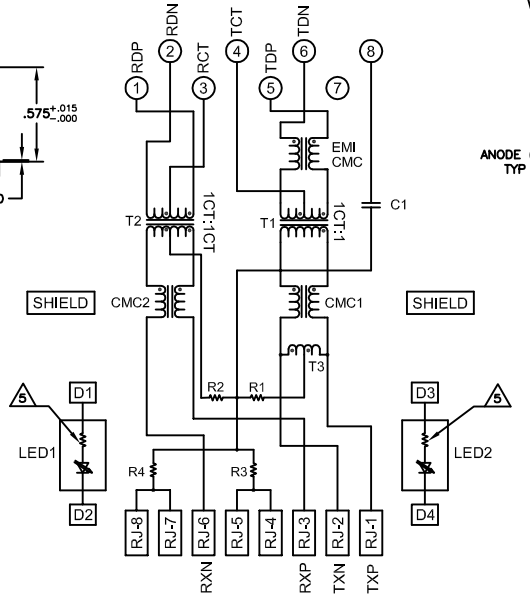

C1 = 1000 pF, 2kV CAPACITOR
R1-R4 = 75 OHMS, 1/16W RESISTORS

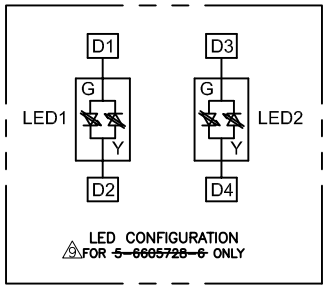

LED CONFIGURATION
9 FOR ~~5-6605728-6~~ ONLY

1 MATERIALS:
HOUSING - THERMOPLASTIC PET POLYESTER FLAMMABILITY RATING UL 94V-0.
SHIELD - .010" THICK, C26800 BRASS PREPLATED WITH 30uINCH SEMI-BRIGHT NICKEL. SOLDER TABS POST DIPPED WITH 100uINCH MIN SAC SOLDER.
MOD JACK CONTACTS - 0.0157 X 0.018" PHOSPHOR BRONZE, 50uINCH MIN OVERALL NICKEL UNDERPLATE, WITH SELECT 50uINCH MIN HARD GOLD FINISH PLATE SOLDERTAILS WITH 100uINCH MIN MATTE TIN AND/OR SAC SOLDER DIP.
LIGHT EMITTING DIODE(LED) - DIFFUSED EPOXY LENS, .020" x .020" CARBON STEEL WIREFRAME LEADS PRE-PLATED WITH 80uINCH SILVER OVER 40uINCH NICKEL UNDERPLATE OVER 40uINCH COPPER UNDERPLATE. POST-PLATED WITH 100uINCH MIN MATTE TIN AND/OR SAC SOLDER DIP OR PURE TIN SOLDER DIP.

2 RJ45 JACK CAVITY CONFORMS TO FCC RULES AND REGULATIONS PART 68, SUB PART F.

3 MAGNETICS
-IMPEDANCE: 100 OHMS
-TURNS RATIO (CHIP:CABLE): TX = 1:1, RX = 1:1
-OPEN CIRCUIT INDUCTANCE (OCL): 350mH MIN @100kHz, 0.1VRMS, 8mADC BIAS FROM 0°C TO 70°C, TX AND RX
-PERFORMANCE @ 25°C:
INSERTION LOSS (IL): 1.1dB MAX FROM 0.5MHz TO 100MHz
RETURN LOSS (RL): 18dB MIN FROM 0.5MHZ TO 30MHz
18-20LOG(f/30)dB MIN FROM 30.1MHz TO 60MHz
12dB MIN FROM 60.1MHz TO 80MHz
CROSSTALK ATTENUATION: 35dB MIN FROM 0.5MHz TO 40MHz
33-20LOG(f/50)dB MIN FROM 40.1MHz TO 100MHz
COMMON MODE REJECTION RATIO (CMRR): 30dB MIN FROM 0.5MHz TO 100MHz
-ISOLATION VOLTAGE: 2250VDC (MAX) FOR 60 SECONDS WITH A RISE TIME OF 500V/SEC. FOR 5-6605728-1,5-6605728-2,5-6605728-6,5-6605728-8,5-6605728-9, 6-6605728-1,6-6605728-2
1500VAC (MAX) AT 60Hz FOR 60 SECS. FOR 6605728-2,6605728-9,1-6605728-1

4. OPERATING TEMPERATURE: FROM 0°C TO +70°C

5 THE 250 OHM LED RESISTORS ARE OPTIONAL, PLEASE SEE CHART FOR PRESENCE OR ABSENCE OF LED RESISTORS. IF THE LED WITHOUT 250 OHM RESISTORS, LED IS DRIVEN WITH CONSTANT CURRENT AT APPROX 20mA.LED COLOR:
DOMINANT WAVELENGTH (λD): GREEN 568 nm TYP. @ IF=20mA
FORWARD VOLTAGE (VF): GREEN 2.2V TYP. @ IF=20mA
DOMINANT WAVELENGTH (λD): YELLOW 588 nm TYP. @ IF=20mA
FORWARD VOLTAGE (VF): YELLOW 2.1V TYP. @ IF=20mA.
DOMINANT WAVELENGTH (λD): ORANGE 605 nm TYP. @ IF=20mA
FORWARD VOLTAGE (VF): YELLOW 2.1V TYP. @ IF=20mA.
IF THE LED WITH 250 OHM RESISTORS,LED IS DRIVEN WITH 5V VOLTAGE AND THE MAX OPERATING CURRENT IS 20mA.LED COLOR:
DOMINANT WAVELENGTH (λD): GREEN 568 nm TYP. @ VF=5V
FORWARD CURRENT (IF): GREEN 12 mA TYP. @ VF=5V
DOMINANT WAVELENGTH (λD): YELLOW 588 nm TYP. @ VF=5V
FORWARD CURRENT (IF): YELLOW 13 mA TYP. @ VF=5V

6 INDICATED CONNECTIONS ARE FOR NIC CONFIGURATION. THE MAGNETICS ARE ASYMMETRICAL AND DO NOT SUPPORT AUTO-MDI/MDIX.

7 TE CONNECTIVITY LOGO, TE CONNECTIVITY PART NUMBER, DATE CODE, COUNTRY OF ORIGIN AND AGENCY APPROVAL MARKING IN APPROXIMATE LOCATION SHOWN.

8. THESE PARTS ARE RECOMMENDED FOR WAVE SOLDERING PROCESS,PREHEAT TEMPERATURE IS 120°C TO 160°C, 120 SECONDS TO 180 SECONDS,PEAK WAVE SOLDERING TEMPERATURE IS 260°C MAX,10 SECONDS MAX.

9 OBSOLETE PARTS: OBSOLETE CIS STREAMLINING PER D.RENAUD/D.SINISI

	LED RESISTORS	2KV DECOUPLING CAPACITOR	LED1 5	LED2 5	PART NUMBER
OBSOLETE 9	NO	YES	GREEN	ORANGE	~~6-6605728-2~~
	YES	YES	GREEN	GREEN	~~6-6605728-1~~
	NO	YES	YELLOW	GREEN	~~5-6605728-9~~
	NO	YES	GREEN	YELLOW	5-6605728-8
9 OBSOLETE	NO	YES	GREEN/YELLOW	GREEN/YELLOW	~~5-6605728-6~~
	YES	YES	YELLOW	GREEN	5-6605728-2
	YES	YES	GREEN	YELLOW	5-6605728-1
9 OBSOLETE	YES	NO	GREEN	GREEN	~~1-6605728-1~~
	YES	NO	YELLOW	GREEN	6605728-9
	YES	NO	GREEN	YELLOW	6605728-2

THIS DRAWING IS A CONTROLLED DOCUMENT.

DIMENSIONS: INCHES

TOLERANCES UNLESS OTHERWISE SPECIFIED: 0 PLC ± - ; 1 PLC ± - ; 2 PLC ± .010 ; 3 PLC ± .005 ; 4 PLC ± - ; ANGLES ± -

MATERIAL 1 FINISH 1

DWN G. ATTADIA - DOCKS 10MAR06
CHK D. FAROLE 10MAR06
APVD D. FAROLE 10MAR06
PRODUCT SPEC 108-2100
APPLICATION SPEC -
WEIGHT -

TE Connectivity

NAME 1X1 MAG45(TM), 7N2 SCHEMATIC (10/100 ETHERNET), 717 SERIES CIRCUIT, SHIELDED, OPTIONAL DECOUPLING CAPACITOR, WITH LEDS

SIZE A1 CAGE CODE 00779 DRAWING NO C-6605728 RESTRICTED TO -

CUSTOMER DRAWING SCALE NTS SHEET 1 OF 1 REV F

4909 (3/11)