PD55025
PD55025S

RF POWER TRANSISTORS
The LdmoST Plastic FAMILY

N-CHANNEL ENHANCEMENT-MODE LATERAL MOSFETs

- EXCELLENT THERMAL STABILITY
- COMMON SOURCE CONFIGURATION
- P_{OUT} = 25 W with 14.5 dB gain @ 500 MHz / 12.5 V
- NEW RF PLASTIC PACKAGE

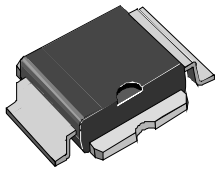

PowerSO-10RF (formed lead)

ORDER CODE	BRANDING
PD55025	PD55025

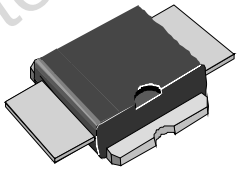

PowerSO-10RF (straight lead)

ORDER CODE	BRANDING
PD55025S	PD55025S

DESCRIPTION

The PD55025 is a common source N-Channel, enhancement-mode lateral Field-Effect RF power transistor. It is designed for high gain, broad band commercial and industrial applications. It operates at 12 V in common source mode at frequencies of up to 1 GHz. PD55025 boasts the excellent gain, linearity and reliability of ST's latest LDMOS technology mounted in the first true SMD plastic RF power package, PowerSO-10RF. PD55025's superior linearity performance makes it an ideal solution for car mobile radio.

The PowerSO-10 plastic package, designed to offer high reliability, is the first ST JEDEC approved, high power SMD package. It has been specially optimized for RF needs and offers excellent RF performances and ease of assembly.

Mounting recommendations are available in ***www.st.com/rf/*** *(look for application note AN1294)*

Obsolete Product(s) - Obsolete Product(s)

ABSOLUTE MAXIMUM RATINGS (T_{CASE} = 25°C)

Symbol	Parameter	Value	Unit
$V_{(BR)DSS}$	Drain-Source Voltage	40	V
V_{GS}	Gate-Source Voltage	± 20	V
I_D	Drain Current	7	A
P_{DISS}	Power Dissipation (@ Tc = 70°C)	79	W
Tj	Max. Operating Junction Temperature	165	°C
T_{STG}	Storage Temperature	-65 to +150	°C

THERMAL DATA

$R_{th(j-c)}$	Junction -Case Thermal Resistance	1.2	°C/W

ELECTRICAL SPECIFICATION (T_{CASE} = 25°C)

STATIC

Symbol	Test Conditions			Min.	Typ.	Max.	Unit
I_{DSS}	V_{GS} = 0 V	V_{DS} = 28 V				1	µA
I_{GSS}	V_{GS} = 20 V	V_{DS} = 0 V				1	µA
$V_{GS(Q)}$	V_{DS} = 28 V	I_D = 100 mA		2.0		5.0	V
$V_{DS(ON)}$	V_{GS} = 10 V	I_D = 3 A			0.7	0.8	V
G_{FS}	V_{DS} = 10 V	I_D = 3 A		2.5			mho
C_{ISS}	V_{GS} = 0 V	V_{DS} = 12.5 V	f = 1 MHz		86		pF
C_{OSS}	V_{GS} = 0 V	V_{DS} = 12.5 V	f = 1 MHz		76		pF
C_{RSS}	V_{GS} = 0 V	V_{DS} = 12.5 V	f = 1 MHz		5.8		pF

DYNAMIC

Symbol	Test Conditions	Min.	Typ.	Max.	Unit
P_{out}	V_{DD} = 12.5 V I_{DQ} = 200 mA f = 500 MHz	25			W
G_P	V_{DD} = 12.5 V I_{DQ} = 200 mA P_{OUT} = 25 W f = 500 MHz		14.5		dB
η_D	V_{DD} = 12.5 V I_{DQ} = 200 mA P_{OUT} = 25 W f = 500 MHz		50		%
Load mismatch	V_{DD} = 12.5 V I_{DQ} = 200 mA P_{OUT} = 25 W f = 500 MHz ALL PHASE ANGLES	20:1			VSWR

PIN CONNECTION

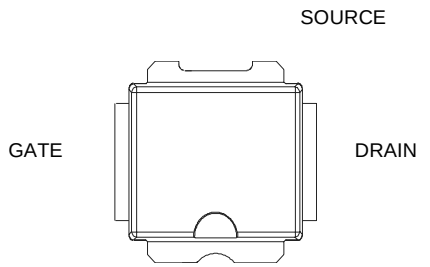

SC15200

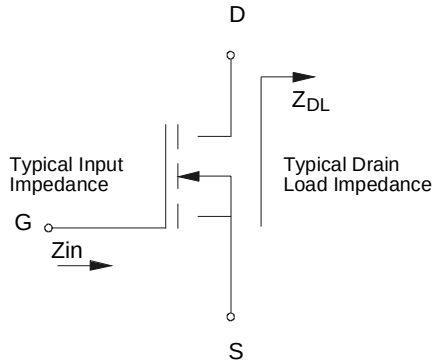

SC13140

Obsolete Product(s)

IMPEDANCE DATA

PD55025S

FREQ. MHz	Z_{IN} (Ω)	Z_{DL}(Ω)
175	3.20 - j 4.41	1.56 + j 2.14
480	1.01 - j 1.67	1.06 + j 0.22
500	0.93 - j 1.53	1.12 + j 0.20
520	0.88 - j 1.98	1.07 + j 0.83

TYPICAL PERFORMANCE *(PD55025S)*

Capacitance vs. Supply Voltage

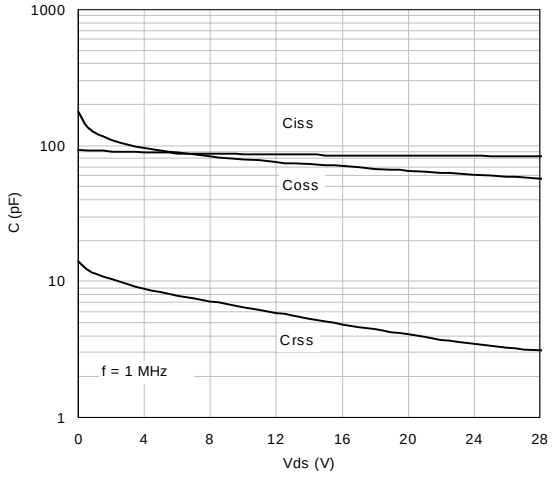

Drain Current vs Gate-Source Voltage

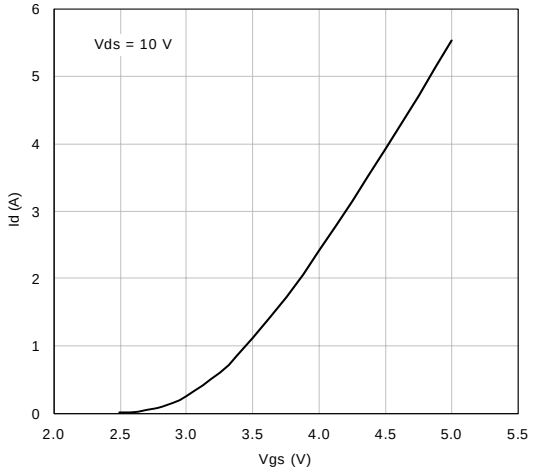

Gate-Source Voltage vs Case Temperature

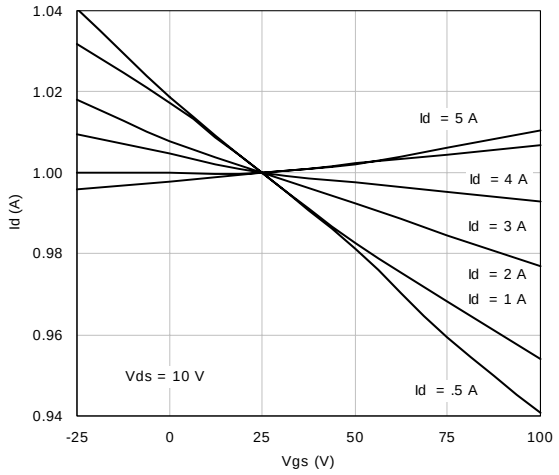

Output Power vs Input Power

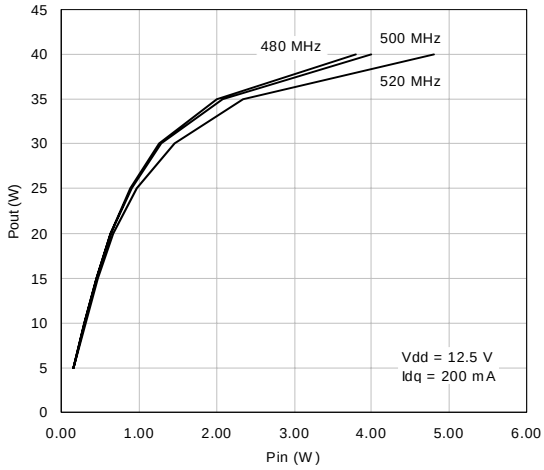

Output Power vs Input Power

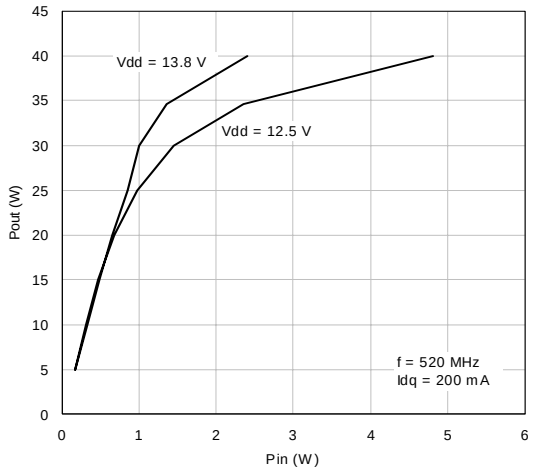

Power Gain vs Output Power

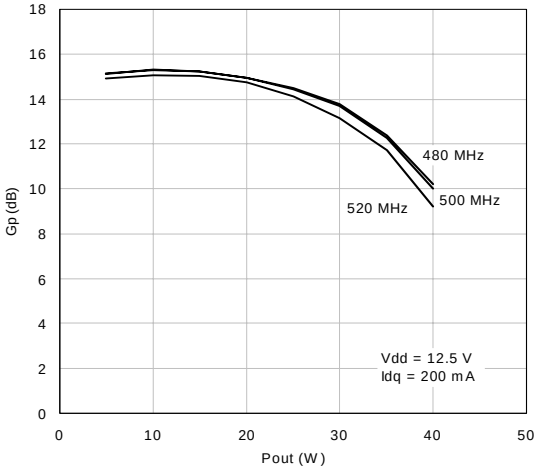

TYPICAL PERFORMANCE *(PD55025S)*

Drain Efficiency vs Output Power

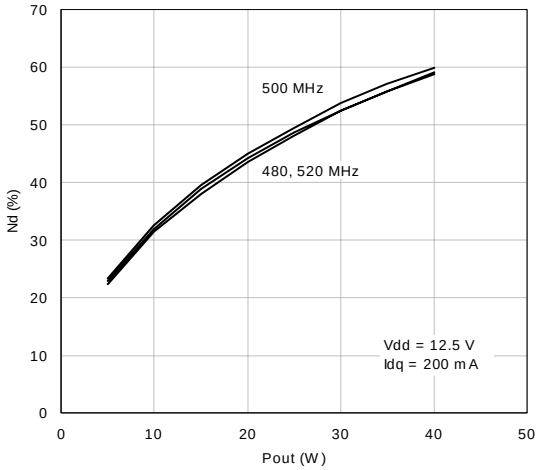

Input Return Loss vs Output Power

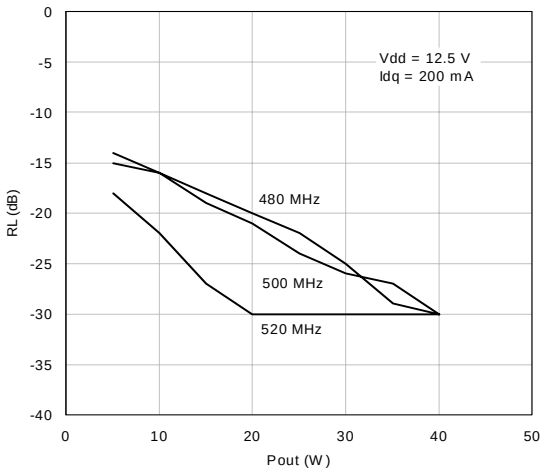

Output Power vs Bias Curent

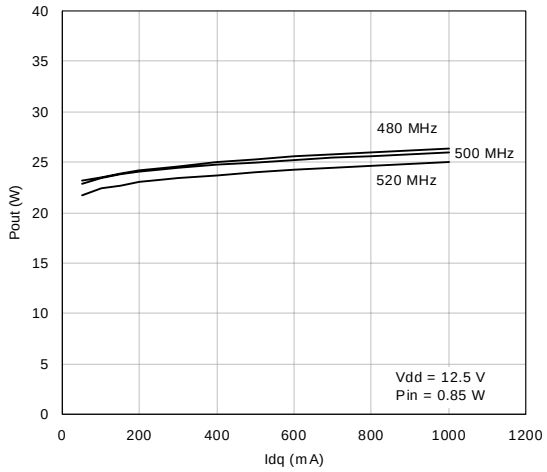

Drain Efficiency vs Bias Current

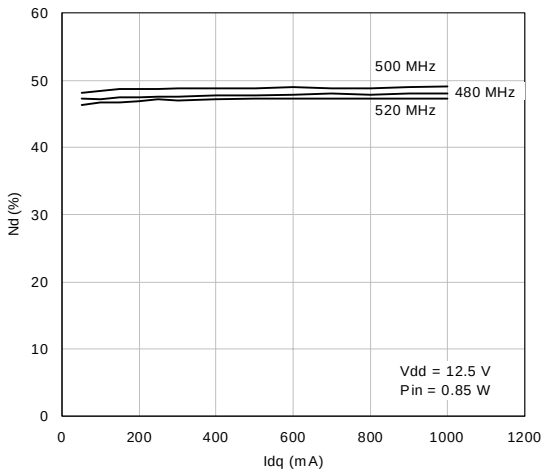

Output Power vs Supply Voltage

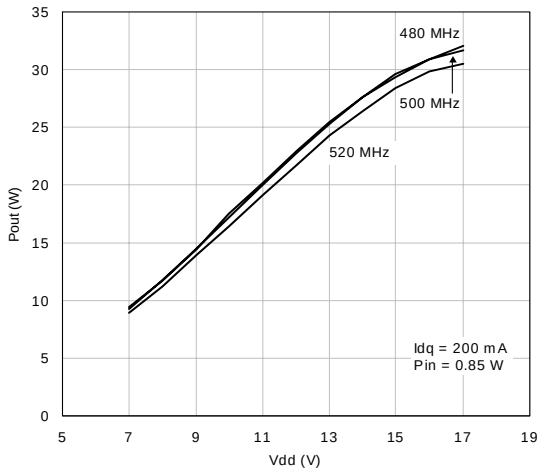

Drain Efficiency vs Supply Voltage

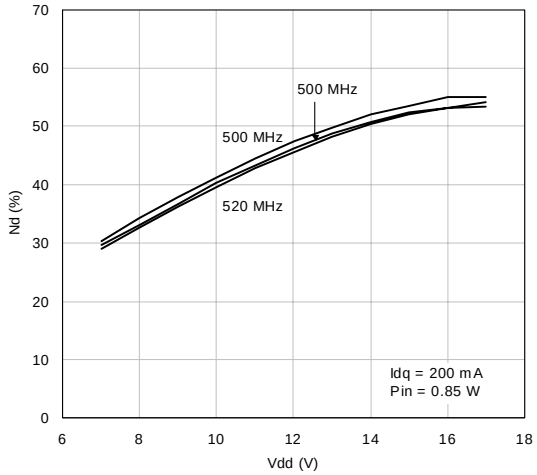

TYPICAL PERFORMANCE *(PD55025S)*

Output Power vs Gate-Source Voltage

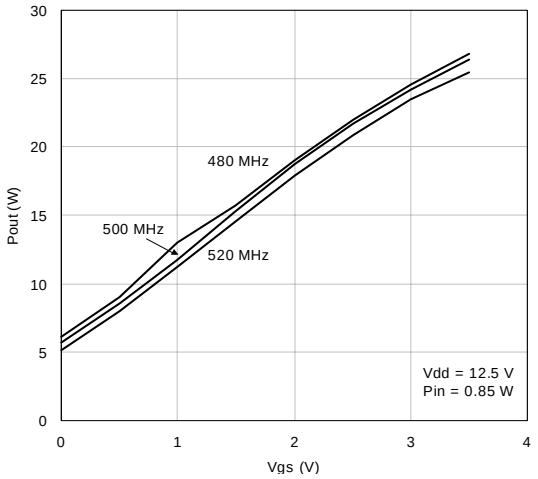

Output Power vs Input Power (f = 175 MHz)

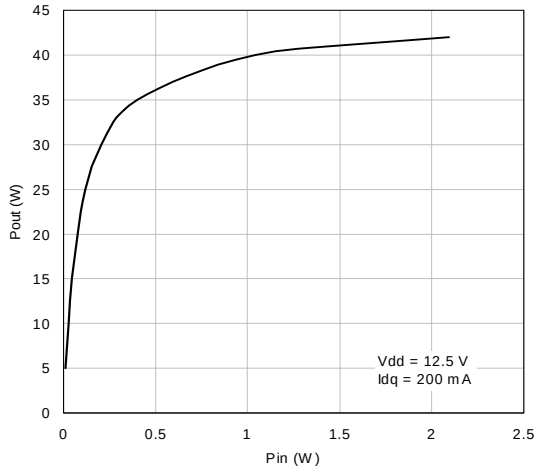

Power Gain vs Output Power (f = 175 MHz)

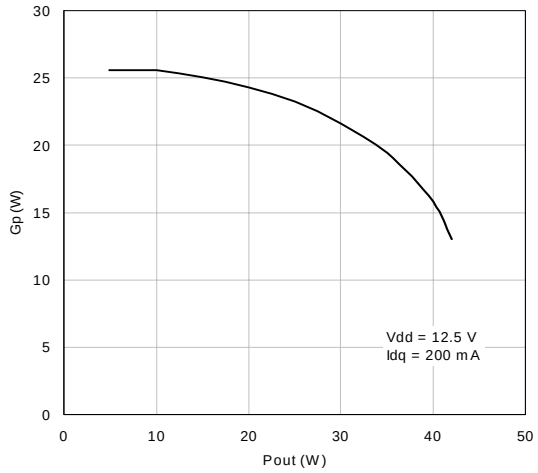

Drain Efficiency vs Output Power (f = 175 MHz)

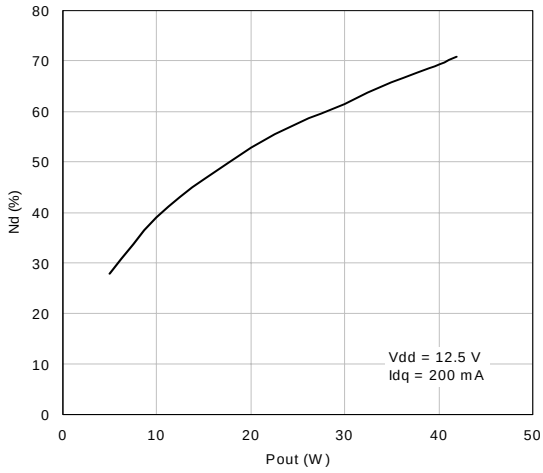

Input Return Loss vs Output Power (f = 175 MHz)

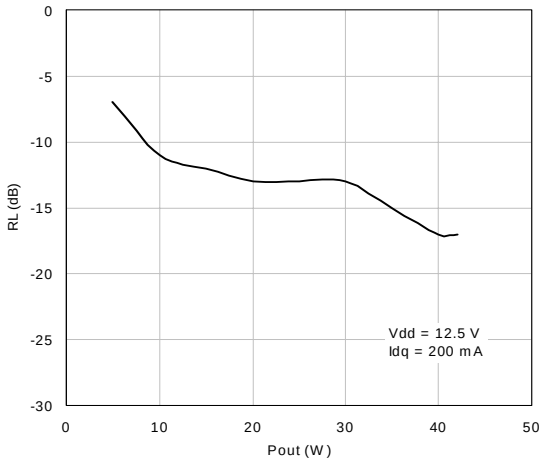

500 MHz TEST CIRCUIT SCHEMATIC (ENGINEERING)

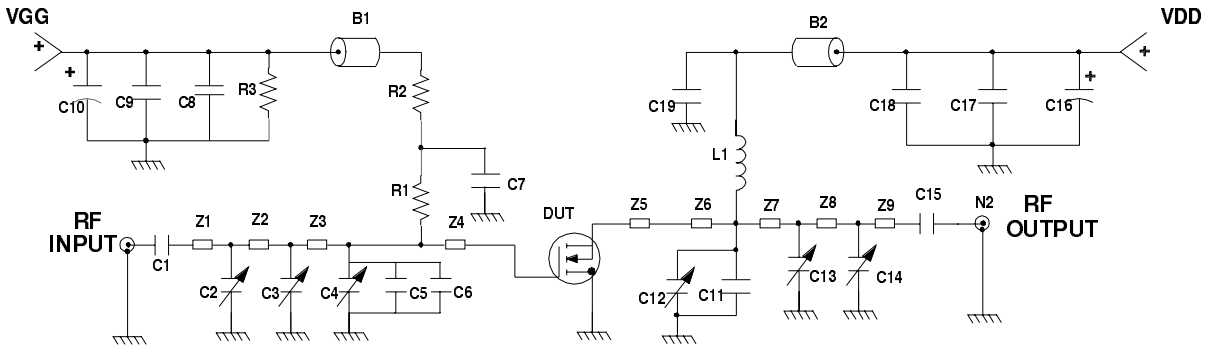

500 MHz TEST CIRCUIT COMPONENT PART LIST

COMPONENT	DESCRIPTION
B1,B2	FERRITE BEAD
C1,C13	300 pF, 100 mil CHIP CAPACITOR
C2,C3,C4,C12,C13,C14	1 to 20 pF TRIMMER CAPACITOR
C6	39 pF ATC 100B SURFACE MOUNT CERAMIC CHIP CAPACITOR
C7, C19	120 pF 100 mil CHIP CAPACITOR
C10, C16	10 µF, 50 V ELECTROLYTIC CAPACITOR
C9, C17	0.1 mF, 100 mil CHIP CAP
C8, C18	1.000 pF 100 mil CHIP CAP
C5, C11	33 pF, 100 mil CHIP CAP
L1	56 nH, 7 TURN, COILCRAFT
N1, N2	TYPE N FLANGE MOUNT
R1	15 Ω, 1 W CHIP RESISTOR
R2	1 KΩ, 1 W CHIP RESISTOR
R3	33 KΩ, 1 W CHIP RESISTOR
Z1	0.471” X 0.080” MICROSTRIP
Z2	1.082” X 0.080” MICROSTRIP
Z3	0.372” X 0.080” MICROSTRIP
Z4,Z5	0.260” X 0.223” MICROSTRIP
Z6	0.050” X 0.080” MICROSTRIP
Z7	0.551” X 0.080” MICROSTRIP
Z8	0.825” X 0.080” MICROSTRIP
Z9	0.489” X 0.080” MICROSTRIP
BOARD	ROGER, ULTRA LAM 2000 THK 0.030”, εr = 2.55 2oz. ED cu 2 SIDES.

Obsolete Product(s) - Obsolete Product(s)

500 MHz TEST CIRCUIT

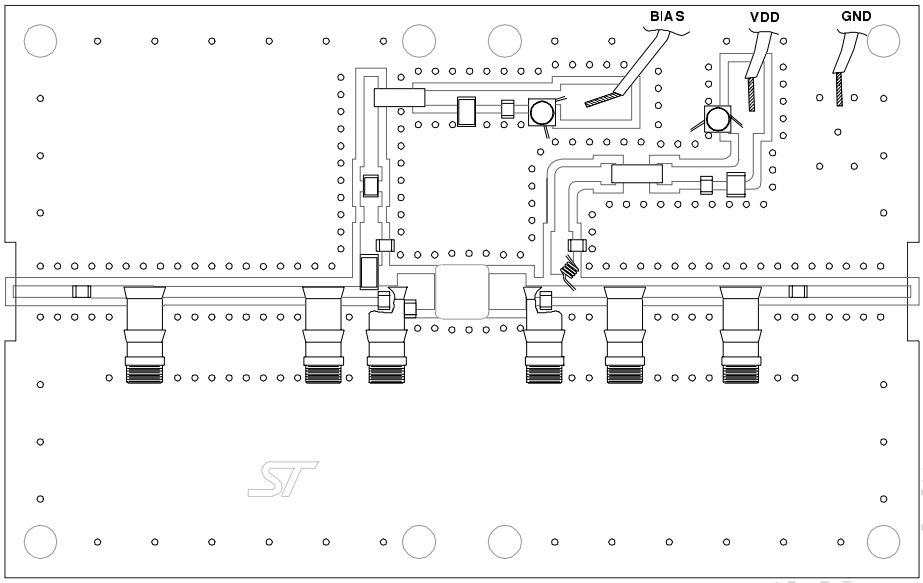

500 MHz TEST CIRCUIT PHOTOMASTER

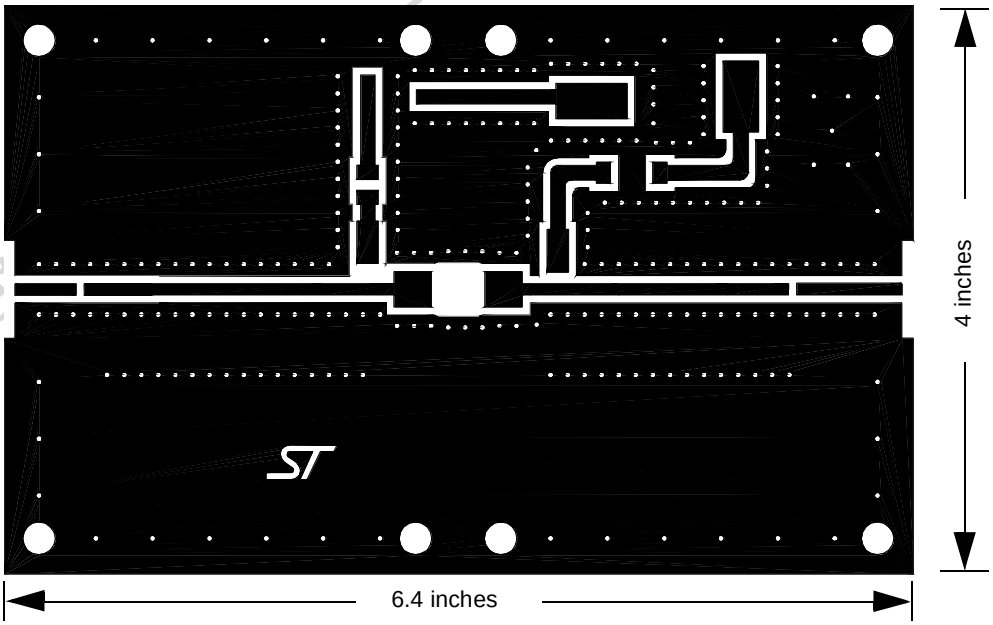

Obsolete Product(s)

175 MHz TEST CIRCUIT SCHEMATIC (ENGINEERING)

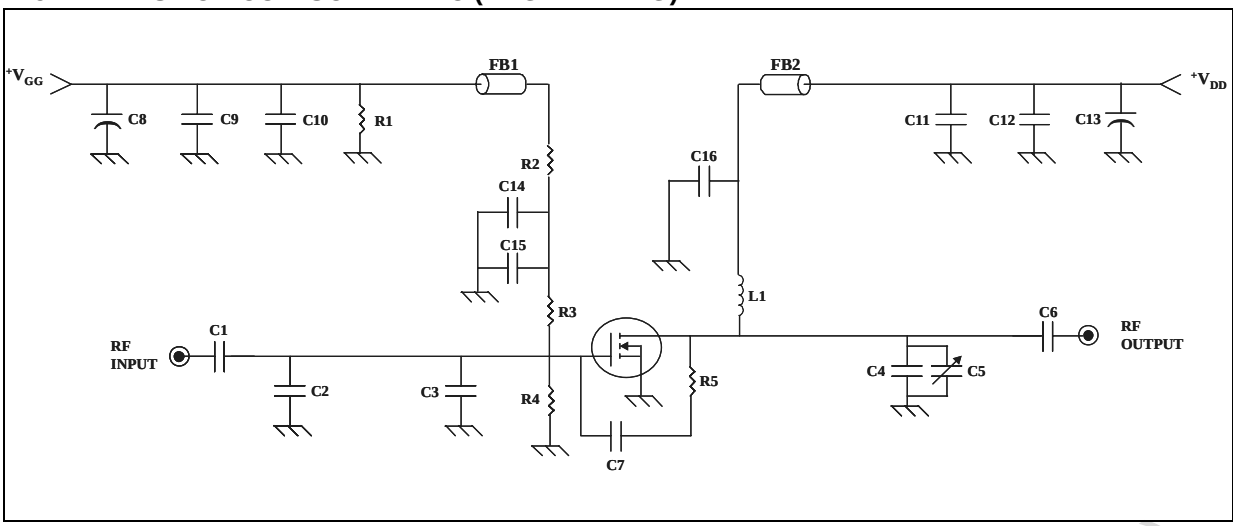

175 MHz TEST CIRCUIT COMPONENT PART LIST

COMPONENT	DESCRIPTION
C1, C6	300 pF CHIP CAPACITOR
C2, C3	91 pF CHIP CAPACITOR
C4, C14	75 pF CHIP CAPACITOR
C5	1-20 pF TRIMMER CAPACITOR
C7	.01 µF MOLDED CAPACITOR
C8, C13	10 µF ELECTROLYTIC CAPACITOR
C9, C12	.1 µF CHIP CAPACITOR
C10, C11	1000 pF CHIP CAPACITOR
C15, C16	1200 pF CHIP CAPACITOR
FB1, FB2	FERRITE BEAD
R1	33 KΩ CHIP RESISTOR
R2	17 Ω CHIP RESISTOR
R3	15 Ω CHIP RESISTOR
R4	47 Ω CHIP RESISTOR
R5	220 Ω CHIP RESISTOR
L1	5 TURN, 16 AWG MAGNET WIRE, ID = .40” ,INDUCTOR
BOARD	ROGER, ULTRA LAM 2000, THK 0.030”, εr = 2.55 2oz. ED cu 2 SIDES.

Obsolete Product(s) - Obsolete Product(s)

COMMON SOURCE S-PARAMETER (PD55025S)
(V_{DS} = 12.5 V I_D = 500 mA)

FREQ (MHz)	$IS_{11}I$	$S_{11}\angle\Phi$	$IS_{21}I$	$S_{21}\angle\Phi$	$IS_{12}I$	$S_{12}\angle\Phi$	$IS_{22}I$	$S_{22}\angle\Phi$
50	0.837	-162	13.33	89	0.018	-1	0.780	-168
100	0.846	-169	6.51	76	0.017	-12	0.803	-172
150	0.862	-171	4.15	66	0.016	-19	0.831	-172
200	0.878	-173	2.93	58	0.015	-26	0.859	-172
250	0.895	-174	2.20	51	0.013	-31	0.874	-172
300	0.910	-174	1.71	45	0.012	-36	0.886	-173
350	0.921	-175	1.36	40	0.010	-40	0.892	-173
400	0.932	-176	1.11	35	0.009	-42	0.897	-175
450	0.941	-177	0.92	31	0.008	-43	0.915	-176
500	0.946	-178	0.78	27	0.007	-44	0.932	-177
550	0.953	-178	0.66	24	0.006	-43	0.946	-178
600	0.957	-179	0.57	21	0.005	-42	0.964	-179
650	0.960	-180	0.50	18	0.004	-39	0.975	-178
700	0.964	180	0.44	16	0.004	-34	0.976	-179
750	0.966	179	0.39	14	0.003	-29	0.981	-179
800	0.968	178	0.95	12	0.002	-15	0.979	-179
850	0.970	178	0.31	10	0.002	-2	0.964	-179
900	0.971	177	0.28	8	0.002	16	0.960	180
950	0.972	177	0.26	6	0.002	34	0.953	179
1000	0.972	176	0.23	5	0.003	45	0.940	178

COMMON SOURCE S-PARAMETER (PD55025S)
(V_{DS} = 12.5 V I_D = 1.5 A)

FREQ (MHz)	$IS_{11}I$	$S_{11}\angle\Phi$	$IS_{21}I$	$S_{21}\angle\Phi$	$IS_{12}I$	$S_{12}\angle\Phi$	$IS_{22}I$	$S_{22}\angle\Phi$
50	0.876	-164	13.87	90	0.013	1	0.823	-172
100	0.880	-172	6.87	79	0.012	-7	0.838	-175
150	0.887	-174	4.46	71	0.012	-13	0.855	-176
200	0.895	-175	3.22	64	0.011	-18	0.873	-175
250	0.905	-176	2.47	58	0.010	-22	0.879	-175
300	0.915	-176	1.96	52	0.009	-25	0.885	-175
350	0.922	-177	1.60	47	0.009	-28	0.886	-175
400	0.931	-178	1.32	42	0.008	-30	0.889	-177
450	0.938	-178	1.11	38	0.007	-31	0.906	-178
500	0.942	-179	0.95	34	0.006	-31	0.923	-179
550	0.948	-179	0.82	31	0.005	-30	0.937	-179
600	0.952	-180	0.71	28	0.005	-27	0.956	-179
650	0.954	180	0.63	25	0.004	-22	0.967	-179
700	0.959	179	0.55	22	0.003	-16	0.969	-179
750	0.961	178	0.49	20	0.003	-6	0.973	-179
800	0.963	178	0.45	17	0.003	3	0.970	-179
850	0.966	177	0.40	15	0.003	17	0.956	-180
900	0.967	177	0.36	13	0.003	27	0.952	179
950	0.968	176	0.33	11	0.003	38	0.945	179
1000	0.968	176	0.30	9	0.003	45	0.933	177

COMMON SOURCE S-PARAMETER (PD55025S)
(V_{DS} = 12.5 V I_D = 3 A)

FREQ (MHz)	$IS_{11}I$	$S_{11}\angle\Phi$	$IS_{21}I$	$S_{21}\angle\Phi$	$IS_{12}I$	$S_{12}\angle\Phi$	$IS_{22}I$	$S_{22}\angle\Phi$
50	0.890	-165	13.19	91	0.012	2	0.837	-174
100	0.892	-172	6.55	81	0.011	-6	0.846	-176
150	0.898	-174	4.28	73	0.011	-12	0.865	-176
200	0.904	-175	3.11	66	0.010	-15	0.879	-176
250	0.913	-176	2.39	60	0.010	-20	0.883	-176
300	0.921	-177	1.91	54	0.009	-23	0.089	-176
350	0.926	-177	1.57	49	0.008	-25	0.887	-176
400	0.935	-178	1.31	44	0.007	-27	0.889	-177
450	0.941	-179	1.10	40	0.007	-28	0.905	-179
500	0.944	-179	0.94	36	0.006	-27	0.921	-179
550	0.949	-180	0.82	33	0.005	-25	0.936	-180
600	0.953	180	0.71	29	0.004	-21	0.954	180
650	0.955	179	0.63	26	0.004	-17	0.964	-180
700	0.959	179	0.56	24	0.003	-10	0.965	-180
750	0.961	178	0.50	21	0.003	-2	0.968	-180
800	0.963	177	0.45	19	0.003	10	0.966	-179
850	0.966	177	0.41	17	0.003	22	0.952	-180
900	0.967	176	0.37	15	0.003	32	0.948	180
950	0.968	176	0.34	15	0.003	41	0.942	179
1000	0.969	175	0.31	11	0.004	49	0.930	177

COMMON SOURCE S-PARAMETER (PD55025S)
(V_{DS} = 13.8 V I_D = 3 A)

FREQ (MHz)	$IS_{11}I$	$S_{11}\angle\Phi$	$IS_{21}I$	$S_{21}\angle\Phi$	$IS_{12}I$	$S_{12}\angle\Phi$	$IS_{22}I$	$S_{22}\angle\Phi$
50	0.849	-164	13.99	91	0.012	2	0.833	-173
100	0.881	-171	6.94	80	0.011	-6	0.841	-175
150	0.895	-173	4.51	72	0.011	-12	0.857	-175
200	0.903	-175	3.27	65	0.010	-16	0.871	-175
250	0.912	-176	2.50	58	0.010	-21	0.877	-175
300	0.921	-176	1.99	52	0.009	-24	0.882	-175
350	0.927	-177	1.62	47	0.008	-27	0.883	-176
400	0.936	-178	1.35	42	0.007	-29	0.886	-177
450	0.943	-178	1.13	38	0.006	-29	0.904	-178
500	0.946	-179	0.97	34	0.006	-29	0.920	-179
550	0.952	-180	0.83	31	0.005	-26	0.935	-179
600	0.955	180	0.72	27	0.004	-23	0.955	-180
650	0.957	179	0.64	24	0.004	-17	0.965	-179
700	0.961	179	0.56	22	0.003	-8	0.967	-179
750	0.963	178	0.50	19	0.003	2	0.970	-179
800	0.965	178	0.45	17	0.003	14	0.968	-179
850	0.968	177	0.41	15	0.003	27	0.953	-179
900	0.969	176	0.37	13	0.003	36	0.949	180
950	0.970	176	0.34	11	0.003	45	0.943	179
1000	0.971	175	0.31	9	0.003	54	0.930	178

PowerSO-10RF Straight Lead MECHANICAL DATA

DIM.	mm			Inch		
	MIN.	TYP.	MAX	MIN.	TYP.	MAX
A1	1.62	1.67	1.72	0.064	0.065	0.068
A2	3.4	3.5	3.6	0.134	0.137	0.142
A3	1.2	1.3	1.4	0.046	0.05	0.054
A4	0.15	0.2	0.25	0.005	0.007	0.009
a		0.2			0.007	
b	5.4	5.53	5.65	0.212	0.217	0.221
c	0.23	0.27	0.32	0.008	0.01	0.012
D	9.4	9.5	9.6	0.370	0.374	0.377
D1	7.4	7.5	7.6	0.290	0.295	0.298
E	15.15	15.4	15.65	0.595	0.606	0.615
E1	9.3	9.4	9.5	0.365	0.37	0.375
E2	7.3	7.4	7.5	0.286	0.292	0.294
E3	5.9	6.1	6.3	0.231	0.24	0.247
F		0.5			0.019	
G		1.2			0.047	
R1			0.25			0.01
R2		0.8			0.031	
T1		6 deg			6 deg	
T2		10 deg			10 deg	

Note (1): Resin protrusions not included (max value: 0.15 mm per side)

Obsolete Product(s)

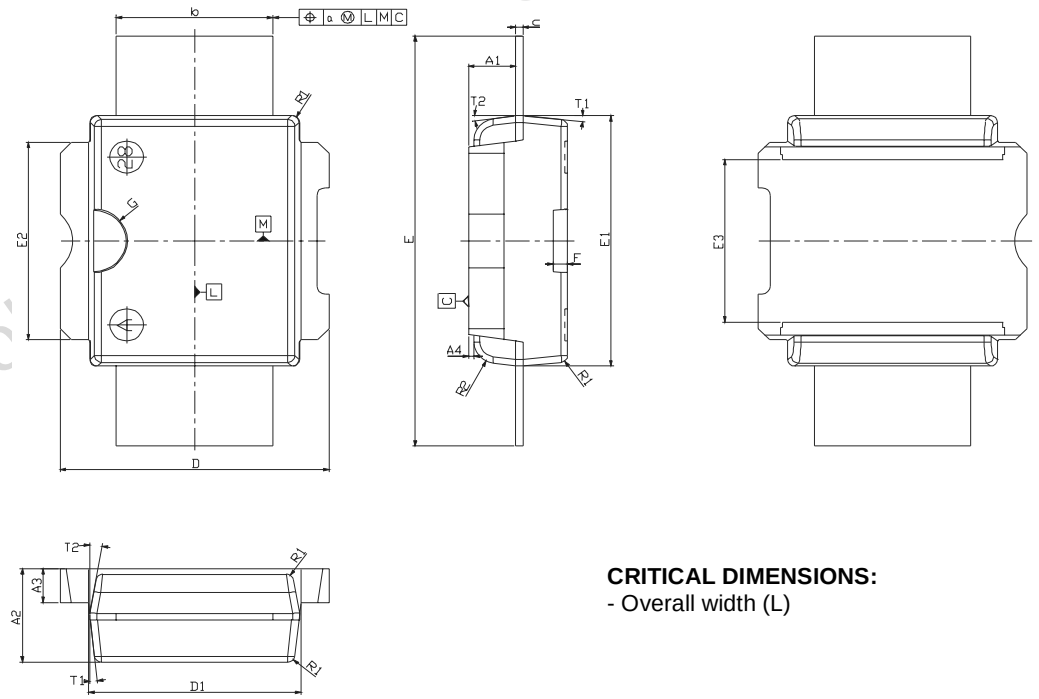

CRITICAL DIMENSIONS:
- Overall width (L)

PowerSO-10RF Formed Lead (Gull Wing) MECHANICAL DATA

DIM.	mm			Inch		
	MIN.	TYP.	MAX	MIN.	TYP.	MAX
A1	0	0.05	0.1	0.	0.0019	0.0038
A2	3.4	3.5	3.6	0.134	0.137	0.142
A3	1.2	1.3	1.4	0.046	0.05	0.054
A4	0.15	0.2	0.25	0.005	0.007	0.009
a		0.2			0.007	
b	5.4	5.53	5.65	0.212	0.217	0.221
c	0.23	0.27	0.32	0.008	0.01	0.012
D	9.4	9.5	9.6	0.370	0.374	0.377
D1	7.4	7.5	7.6	0.290	0.295	0.298
E	13.85	14.1	14.35	0.544	0.555	0.565
E1	9.3	9.4	9.5	0.365	0.37	0.375
E2	7.3	7.4	7.5	0.286	0.292	0.294
E3	5.9	6.1	6.3	0.231	0.24	0.247
F		0.5			0.019	
G		1.2			0.047	
L	0.8	1	1.1	0.030	0.039	0.042
R1			0.25			0.01
R2		0.8			0.031	
T	2 deg	5 deg	8 deg	2 deg	5 deg	8 deg
T1		6 deg			6 deg	
T2		10 deg			10 deg	

Note (1): Resin protrusions not included (max value: 0.15 mm per side)

Obsolete Product(s)

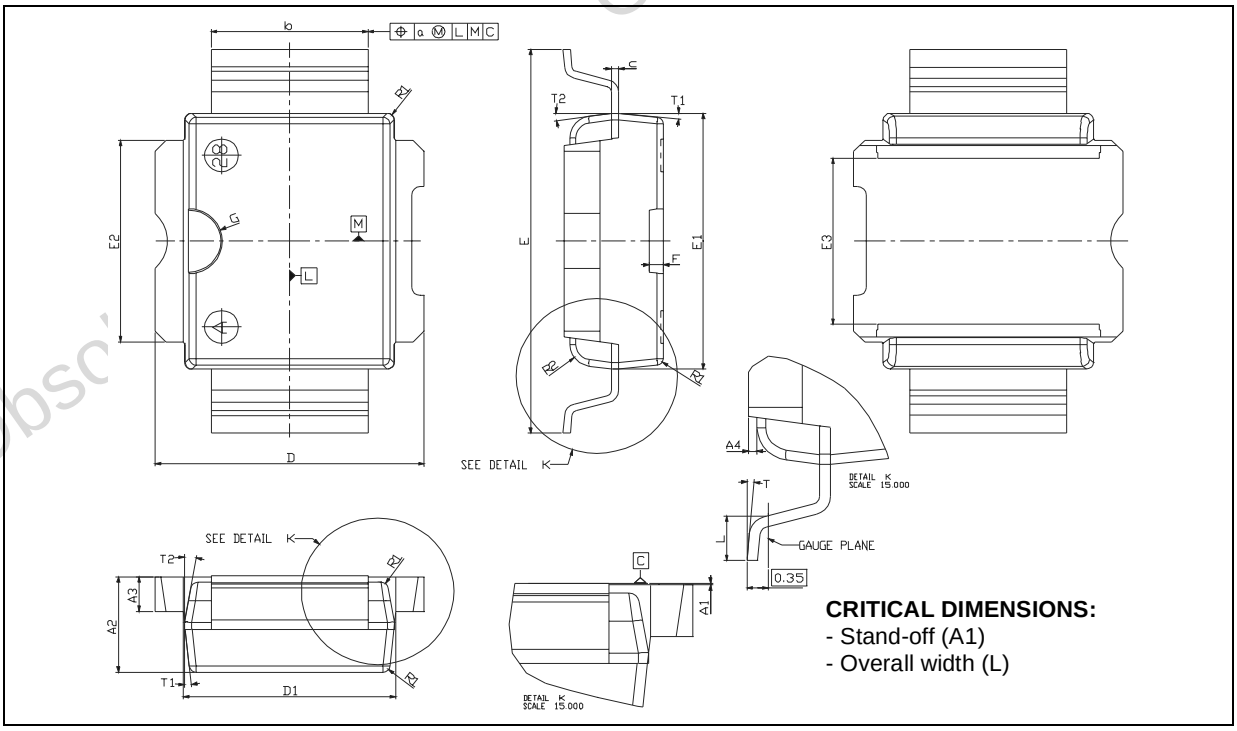

Obsolete Product(s) - Obsolete Product(s)

Information furnished is believed to be accurate and reliable. However, STMicroelectronics assumes no responsibility for the consequences of use of such information nor for any infringement of patents or other rights of third parties which may result from its use. No license is granted by implication or otherwise under any patent or patent rights of STMicroelectronics. Specifications mentioned in this publication are subject to change without notice. This publication supersedes and replaces all information previously supplied. STMicroelectronics products are not authorized for use as critical components in life support devices or systems without express written approval of STMicroelectronics.

The ST logo is registered trademark of STMicroelectronics
® 2003 STMicroelectronics - All Rights Reserved

All other names are the property of their respective owners.

STMicroelectronics GROUP OF COMPANIES
Australia - Brazil - Canada - China - Finland - France - Germany - Hong Kong - India - Israel - Italy - Japan -
Malaysia - Malta - Morocco - Singapore - Spain - Sweden - Switzerland - United Kingdom - U.S.A.
http://www.st.com