Ratings
Voltage: 150 V
Temperature: -40~70 °C

Conductor
Conductor count: 7
Gauge: 22 AWG 0.33 mm²
Material: Tinned copper strands
Strand size: ∅0.08 x 65
Resistance at 20 °C: 59.4Ω /km max

Insulator
Material: HDPE
Color: white, black, red, yellow, blue, green, orange
Diameter: ∅1.25 ±0.10 mm
Nominal thickness: 0.24 mm
Resistance at 20 °C: 100 MΩ /km min

Wrap
Material: cotton paper

Filler
Material: aramid fiber

Outer jacket
Material: TPU
Color: white
Diameter: ∅5.1 ±0.25 mm
Nominal thickness: 0.6 mm

Tests
Tensile strength: 26 kgf min
Dielectric test: 1500 V dc for 1 minute without breakdown
Bend test at 200 g, ±60 °, 30 cycles /min: 15,000 cycle minimum

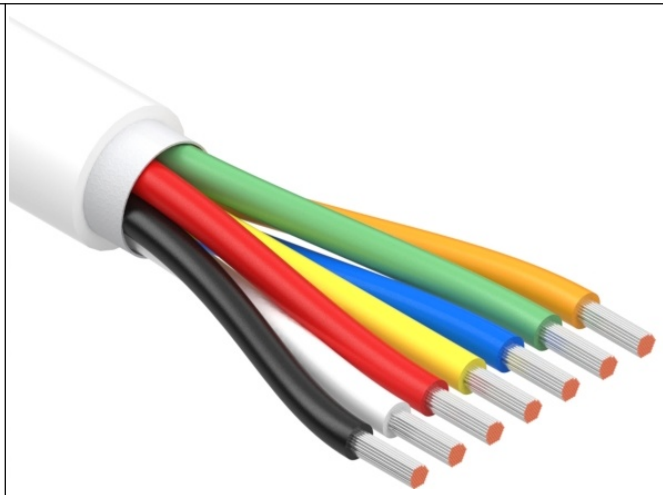

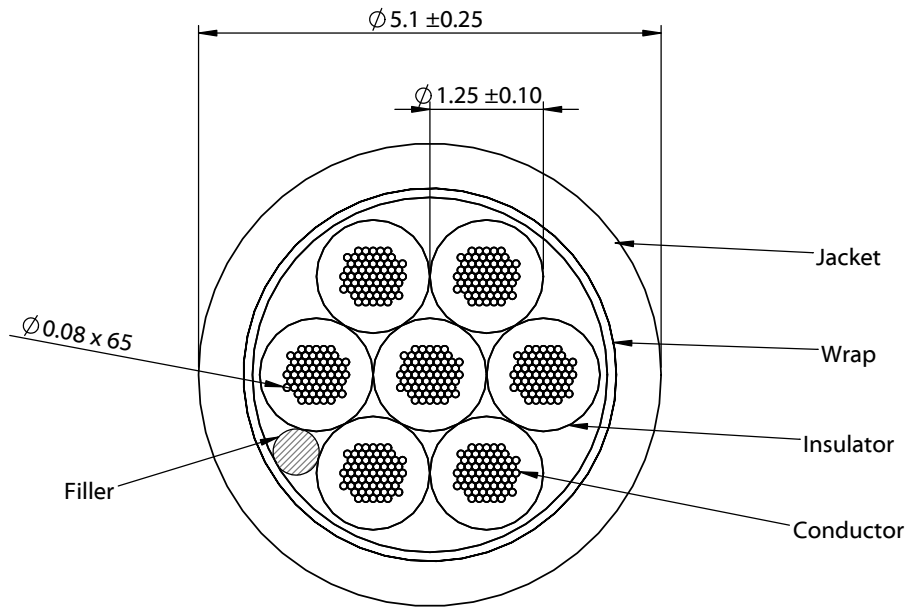

Revision:	Date:	Description:
A	8/23/2022	Initial release

Prepared: PB Digitally signed by PB Date: 2022.09.20 15:45:15 -07'00'

Verified: JD Digitally signed by JD Date: 2022.09.21 15:28:37 -07'00'

Dimensions are in millimeters.
Tolerances:
X: ± 0.5 mm
X.X: ± 0.3 mm
X.XX: ± 0.05 mm

Notes:

RoHS compliant
Jacket meets ISO 10993 Biological Compatibility
Phthalate and halogen free
Function test: no open, no short, no intermittent

Description:

Wire, 7C TS, 22 AWG, 150V, 70C, 5.1 mm, TPU, 75A, white, WBL

TENSILITY
tel 1.541.323.3228 800 877.670.7118
fax 1.541.323.4202 web tensility.com

Size: A
Part number: 30-02816
Scale: 12:1
Sheet 1 of 1

To see a custom version of this cable assembly, call Tensility at 541-323-3228 or email engineering@tensility.com

5 4 3 2 1