PART NUMBER	POSITION 1	POSITION 2	POSITION 3	MSL	PAD LAYOUT REFERENCE
593-101010-302F 593-101010-313F	RED 2mA	RED 2mA	RED 2mA	2	FIG. 1
593-131313-302F 593-131313-313F	GREEN 2mA	GREEN 2mA	GREEN 2mA	2	FIG. 1
593-141414-302F 593-141414-313F	YELLOW 2mA	YELLOW 2mA	YELLOW 2mA	2	FIG. 1
593-151515-302F 593-151515-313F	ORANGE 2mA	ORANGE 2mA	ORANGE 2mA	2	FIG. 1
593-202020-302F 593-202020-313F	RED	RED	RED	2	FIG. 1
593-202024-302F 593-202024-313F	RED	RED	YELLOW	2	FIG. 1
593-202324-302F 593-202324-313F	RED	GREEN	YELLOW	2	FIG. 1
593-202326-302F 593-202326-313F	RED	GREEN	BLUE	2	FIG. 1
593-203120-302F 593-203120-313F	RED	YELLOW GREEN	RED	2	FIG. 1 & FIG. 2
593-212121-302F 593-212121-313F	AlGaAs RED	AlGaAs RED	AlGaAs RED	2	FIG. 1
593-212130-302F 593-212130-313F	AlGaAs RED	AlGaAs RED	SUPER RED GREEN	2	FIG. 1 & FIG. 2
593-212222-302F 593-212222-313F	AlGaAs RED	GREEN	GREEN	2	FIG. 1
593-212226-302F 593-212226-313F	AlGaAs RED	GREEN	BLUE	2	FIG. 1
593-212729-302F 593-212729-313F	AlGaAs RED	AlInGaP YELLOW	InGaN GREEN	2a	FIG. 1
593-222222-302F 593-222222-313F	GREEN	GREEN	GREEN	2	FIG. 1
593-222221-302F 593-222221-313F	GREEN	GREEN	AlGaAs RED	2	FIG. 1
593-222721-302F 593-222721-313F	GREEN	AlInGaP YELLOW	AlGaAs RED	2	FIG. 1
593-223020-302F 593-223020-313F	GREEN	RED/GREEN	RED	2	FIG. 1 & FIG. 2
593-232323-302F 593-232323-313F	GREEN	GREEN	GREEN	2	FIG. 1
593-232420-302F 593-232420-313F	GREEN	YELLOW	RED	2	FIG. 1
593-232424-302F 593-232424-313F	GREEN	YELLOW	YELLOW	2	FIG. 1
593-232627-302F 593-232627-313F	GREEN	BLUE	AlInGaP YELLOW	2	FIG. 1
593-242320-302F 593-242320-313F	YELLOW	GREEN	RED	2	FIG. 1
593-242424-302F 593-242424-313F	YELLOW	YELLOW	YELLOW	2	FIG. 1
593-262626-302F 593-262626-313F	BLUE	BLUE	BLUE	2	FIG. 1
593-272020-302F 593-272020-313F	AlInGaP YELLOW	RED	RED	2	FIG. 1
593-272129-302F 593-272129-313F	AlInGaP YELLOW	AlGaAs RED	InGaN GREEN	2	FIG. 1
593-272323-302F 593-272323-313F	AlInGaP YELLOW	GREEN	GREEN	2	FIG. 1
593-272727-302F 593-272727-313F	AlInGaP YELLOW	AlInGaP YELLOW	AlInGaP YELLOW	2	FIG. 1
593-282828-302F 593-282828-313F	WHITE	WHITE	WHITE	2	FIG. 1
593-292627-302F 593-292627-313F	InGaN GREEN	BLUE	AlInGaP YELLOW	2a	FIG. 1
593-292721-302F 593-292721-313F	InGaN GREEN	AlInGaP YELLOW	AlGaAs RED	2a	FIG. 1
593-292727-302F 593-292727-313F	InGaN GREEN	AlInGaP YELLOW	AlInGaP YELLOW	2a	FIG. 1
593-292929-302F 593-292929-313F	InGaN GREEN	InGaN GREEN	InGaN GREEN	2a	FIG. 1
593-303030-302F 593-303030-313F	SUPER RED GREEN	SUPER RED GREEN	SUPER RED GREEN	2	FIG. 2
593-303126-302F 593-303126-313F	SUPER RED GREEN	YELLOW GREEN	BLUE	2	FIG. 1 & FIG. 2
593-312020-302F 593-312020-313F	YELLOW GREEN	RED	RED	2	FIG. 1 & FIG. 2
593-313131-302F 593-313131-313F	YELLOW GREEN	YELLOW GREEN	YELLOW GREEN	2	FIG. 2
593-323232-302F 593-323232-313F	SUPER-RED YELLOW	SUPER-RED YELLOW	SUPER-RED YELLOW	2	FIG. 2
593-353535-302F 593-353535-313F	RED GREEN BLUE	RED GREEN BLUE	RED GREEN BLUE	2a	FIG. 2

REV	REVISIONS	DRN	APP	DATE
A	NEW RELEASE	BP	NO	11-6-17
B	ADDED P/N: 593-27-2020-313F & 593-27-2020-302F ON THE CHART	LD	SK	6-6-18
C	REVISED COLOR OF PART NUMBERS TO FOLLOW THE CHART	LD	SK	6-21-18
D	ADDED A NOTE ON THE DWG TO INDICATE SILICONE LENS	LD	NO	7-20-18
E	REMOVED P/N 593-272129-801F, 593-272129-802F, 593-272727-803F, 593-272727-804F	LD	NO	7-23-18
F	ADDED P/N 593-223020-302F, 593-223020-313F	LD	NO	10-14-19

593-XXXXXX-302F
PACKAGING SPECIFICATION

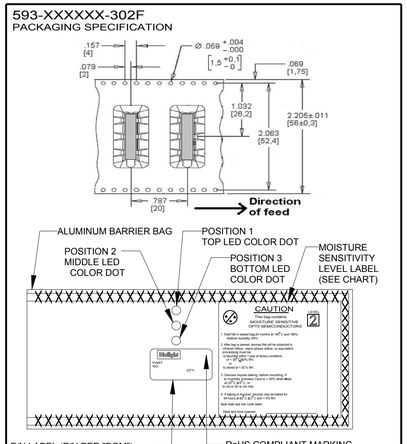

* 5 PCS. SAMPLE STRIP ON 56MM WIDE CARRIER TAPE
* STRIP PLACED IN ALUMINUM BARRIER BAG.
* LABEL TO INCLUDE P/N, QTY. PER BAG, MFG DATE, LED LOT NO., LED COLOR, LED BIN INTENSITY FOR BOTH LED'S

593-XXXXXX-313F
PACKAGING SPECIFICATION

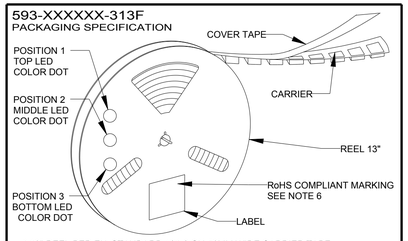

* 13" REEL PER EIA STANDARD 481-2 ON 56MM WIDE CARRIER TAPE
* QUANTITY = 150 Pcs/REEL IN VACUUM SEALED BAG
* LABEL AND COLOR DOTS ON REEL AND ON BAG
* LABEL TO INCLUDE P/N , QTY. PER BAG , MFG DATE LED LOT No , LED COLOR , LED BIN INTENSITY FOR ALL LED'S CORNER OF LABEL ON REEL INDICATES MOISTURE SENSITIVITY LEVEL ALUMINUM BARRIER BAG INCLUDES MSL LABEL

MULIT-COLOR LED PIN REFERENCES				
LED COLOR	PIN 1	PIN 2	PIN 3	PIN 4
R/Y BI-COLOR	RED CATHODE	RED ANODE	YELLOW ANODE	YELLOW CATHODE
Y/G BI-COLOR	YELLOW CATHODE	YELLOW ANODE	GREEN ANODE	GREEN CATHODE
R/G BI-COLOR	RED CATHODE	RED ANODE	GREEN ANODE	GREEN CATHODE
R/G/B TRI-COLOR	RED CATHODE	COMMON ANODE	GREEN CATHODE	BLUE CATHODE

RoHS COMPLIANT 593-XXXXXX-3XXF
Part Numbers with the "F" suffix ending are RoHS Compliant.
Packaging is marked with "RoHS Compliant" label or equivalent markings.

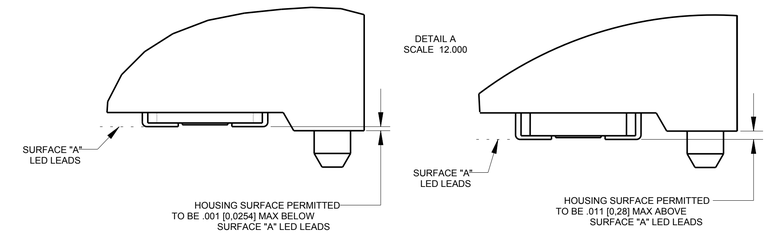

COLOR CODE	COLOR		OPERATING CHARACTERISTICS AT 25 °C AMBIENT						
			LUMINOUS INTENSITY	FORWARD VOLTAGE (V)			DOMINANT WAVELENGTH (nm)		
			TYP	TEST COND	TYP	MAX	MIN	TYP	MAX
10	RED 2mA		5 mcd @IF=2mA	IF = 2mA	1.7	2.2	624	630	636
13	GREEN 2mA		4 mcd @IF=2mA	IF = 2mA	1.7	2.2	566	570	575
14	YELLOW 2mA		4.3 mcd @IF=2mA	IF = 2mA	1.7	2.2	580	587	595
15	ORANGE 2mA		7 mcd @IF=2mA	IF = 2mA	1.7	2.2	600	606	609
20	RED		6 mcd @ IF=20mA	IF = 10mA	2.0	2.5	622	628	634
21	AlGaAs RED		19 mcd @IF=20mA	IF = 10mA	1.75	2.5	—	645	—
22	HI. INT. GREEN		10 mcd @IF=20mA	IF = 10mA	2.0	2.5	564	570	576
23	GREEN		9 mcd @ IF=20mA	IF = 10mA	2.0	2.5	564	570	576
24	YELLOW		8 mcd @ IF=20mA	IF = 10mA	2.0	2.5	580	587	595
26	BLUE		10 mcd @IF=20mA	IF = 10mA	3.1	3.7	465	471	477
27	AlInGaP YELLOW		36 mcd @IF=20mA	IF = 10mA	2.0	2.4	580	587	595
28	WHITE		62 mcd @IF=20mA	IF = 10mA	3.1	3.4	—	X .33 Y .33	—
29	InGaN GREEN		213 mcd @IF=20mA	IF = 20mA	3.7	4.3	—	525	—
30	RED/GREEN BI-COLOR	RED	11 mcd @IF=10mA	IF = 10mA	2.0	2.5	622	628	634
		GREEN	6 mcd @IF=10mA	IF = 10mA	2.0	2.5	564	570	576
31	YELLOW/GREEN BI-COLOR	YELLOW	13 mcd @IF=10mA	IF = 10mA	2.0	2.5	584	590	596
		GREEN	6 mcd @IF=10mA	IF = 10mA	2.0	2.5	564	570	576
32	RED/YELLOW BI-COLOR	RED	34 mcd @IF=20mA	IF = 20mA	2.0	2.3	627	633	639
		YELLOW	26 mcd @IF=20mA	IF = 20mA	2.0	2.4	580	587	595
35	RED/GRN/BLUE TRI-COLOR	RED	45 mcd @IF=20mA	IF = 20mA	1.9	2.4	—	626	—
		GREEN	114 mcd @IF=20mA	IF = 20mA	3.4	4.05	515	525	535
		BLUE	25 mcd @IF=20mA	IF = 20mA	3.4	4.05	460	470	480

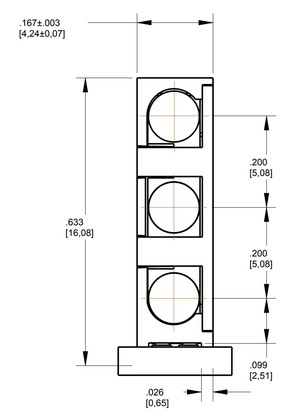

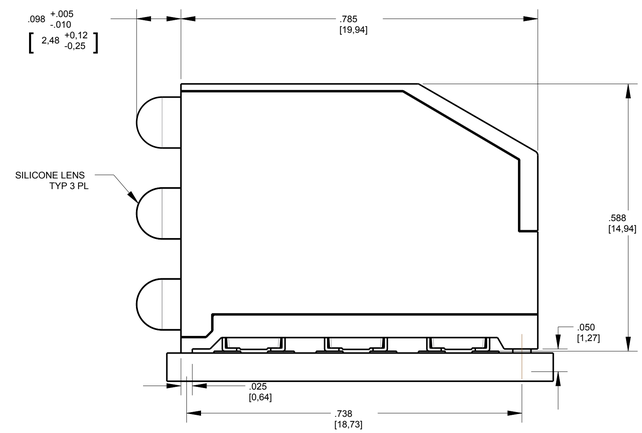

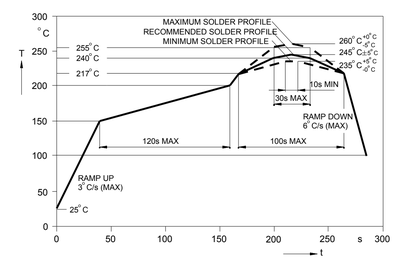

RECOMMENDED RoHS COMPLIANT REFLOW PROFILE

NOTES:
1. PRODUCT P/N'S WITH "F" SUFFIX ENDING ARE RoHS COMPLIANT. LED LEADS ARE PLATED TIN (Sn) WITH NICKEL (Ni) UNDERPLATE ON COPPER (Cu) LEADS.
2. STORAGE OF TAPED PARTS SHALL NOT EXCEED TWELVE [12] MONTHS AFTER WHICH RE-PACKAGING IS REQUIRED.
3. FRONT AND REAR TERMINALS [OF EACH LED] OF THE ASSEMBLY TO BE WITHIN .005 COPLANARITY.
4. A MOISTURE SENSITIVITY LEVEL LABEL PLACED ON BAG. CHECK CHART FOR PROPER LEVEL
5. *** CAUTION *** FOR PRODUCTS THAT ARE ESD SENSITIVE, OBSERVE PRECAUTIONS IN HANDLING ELECTROSTATIC SENSITIVE DEVICES. FOR EYE SAFETY DO NOT STARE DIRECTLY INTO THE LIGHT BEAM OF THESE LED DEVICES AT CLOSE RANGE.
6. THIS PRODUCT IS RoHS COMPLIANT. EACH BAG IS MARKED WITH RoHS COMPLIANT LABEL OR EQUIVALENT MARKINGS. LED MUST BE Pb FREE (RoHS COMPLIANT).
7. DIALIGHT PART NUMBERS: 593-XXXXXX-302F (STRIP) 593-XXXXXX-313F (REEL)

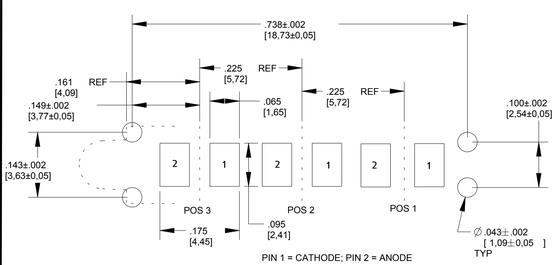

PIN 1 = CATHODE; PIN 2 = ANODE

FIG. 1 RECOMMENDED PAD LAYOUT - SINGLE COLOR LEDS

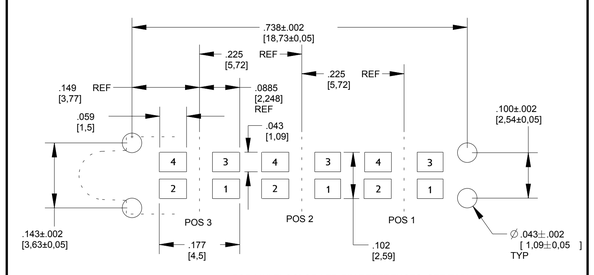

FOR MULTI-COLOR LED PIN REFERENCES, SEE TABLE

FIG. 2 RECOMMENDED PAD LAYOUT - MULTI-COLOR LEDS

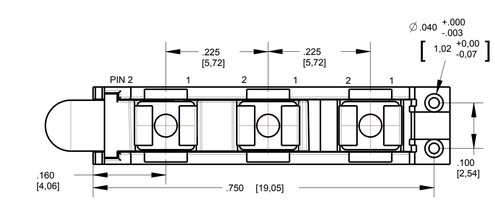

SINGLE COLOR LED

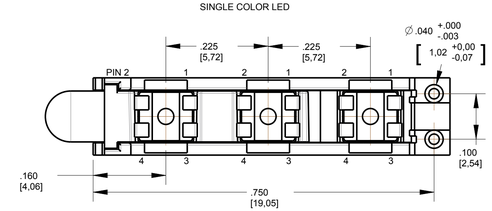

SCALE 6.000

BI-COLOR LED & TRI-COLOR LED

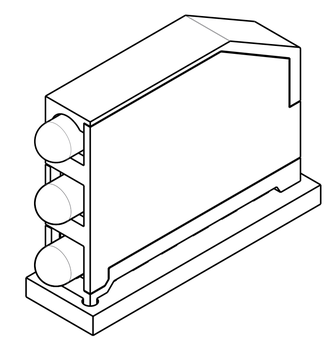

ATTENTION:
OBSERVE PRECAUTIONS FOR HANDLING ELECTROSTATIC SENSITIVE DEVICES

THIS DRAWING AND THE CONTENTS HEREIN ARE CONFIDENTIAL AND THE SOLE PROPERTY OF DIALIGHT. REPRODUCTION OF THIS DRAWING OR CONSTRUCTION OF ANY PARTS WITHIN THIS DRAWING ARE FORBIDDEN WITHOUT THE WRITTEN CONSENT OF DIALIGHT.

SCALE: 6.000
ALL DIM'S IN: INCHES (MM)
TOLERANCES: UNLESS OTHERWISE SPECIFIED
FRACTIONS: ±1/64
DECIMALS (.XX): ±.01
DECIMALS (.XXX): ±.005
DECIMALS (.XXX): ±.0005
ANGLES: ±3°
FINISH: -
FSCM 83330

DRAWING NUMBER: C-18320
REV: F
TITLE: TRI-LEVEL PRISM
MATERIAL: RoHS COMPLIANT

Dialight
1501 ROUTE 34 SOUTH
FARMINGDALE, NJ 07727

SHEET 1 OF 1 | FAMILY TABLE: