Alle Rechte vorbehalten/ *All rights reserved*

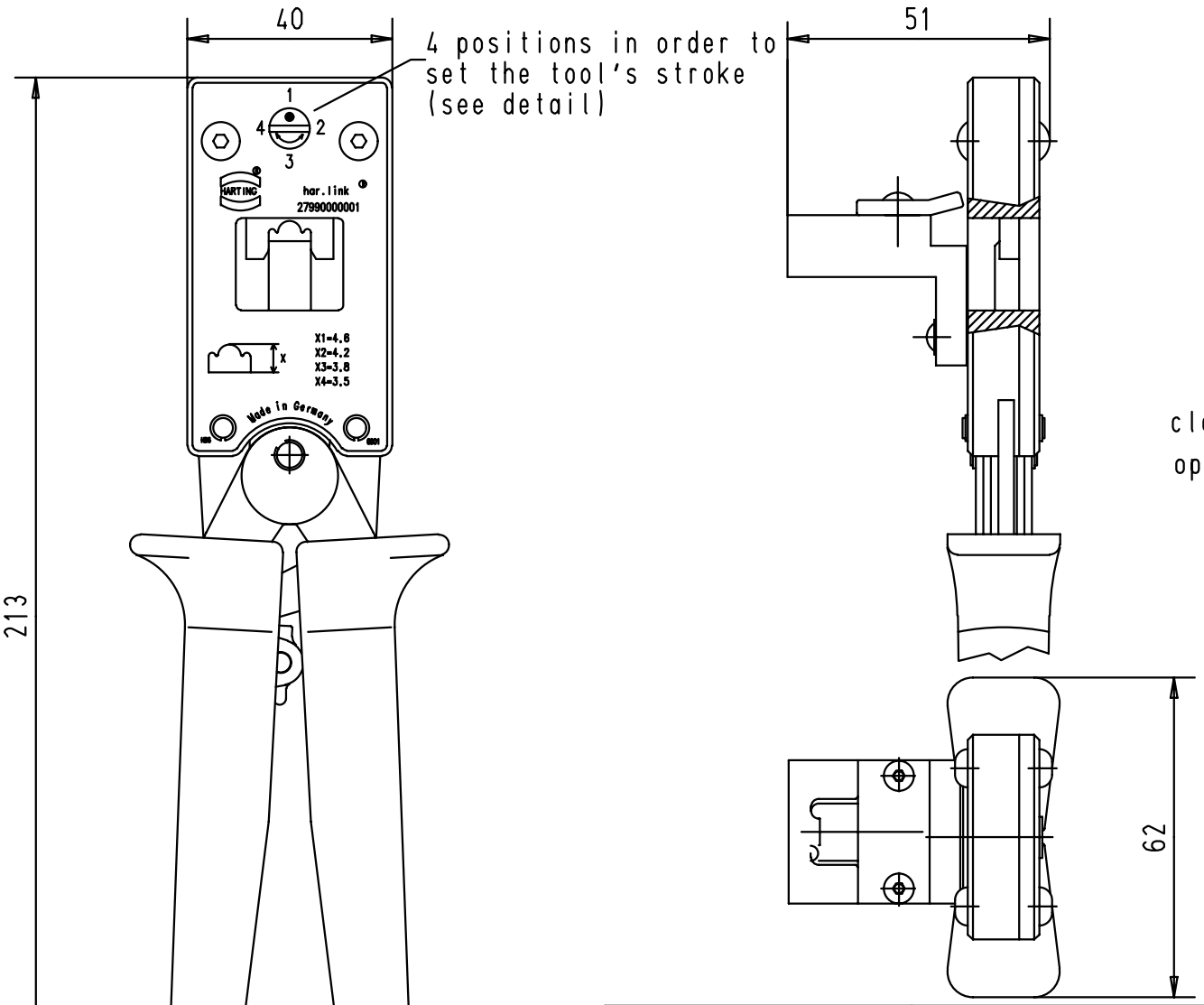

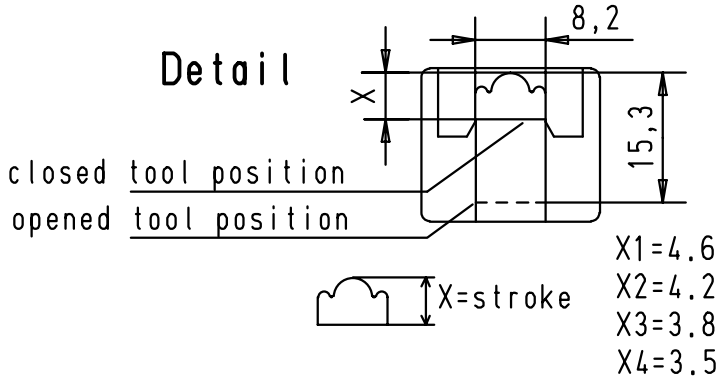

cable max ø : 5,7 mm

				Dat.	Name
			Detail.	05-JAN-01	JB
			Insp.		
			Stand.		
27966	05-JAN-01	JB			
Mod.	Dat.	Name			

All Dim. in mm
Orig. Size DIN A 4

HARTING EURL
F-95972 Paris

har.link®
free connector
CABLE CRIMP TOOL

TB 27 99 000 0001

Sub. 27 99 000 0001.01

Maßstab/ *Scale* 3/4

Blatt/ *Page* 1/1