FILE NO.	A-CD-501-02

NOTES:

① MAT'L: COPPER (STOCK TKN. $\frac{.028}{.71}$)
PLATING: ELECTRO TIN (.0003 MIN)
② TIN-PLATED BRASS FUNNEL FERRULE
③ NYLON INSULATION (COLOR CODED RED)

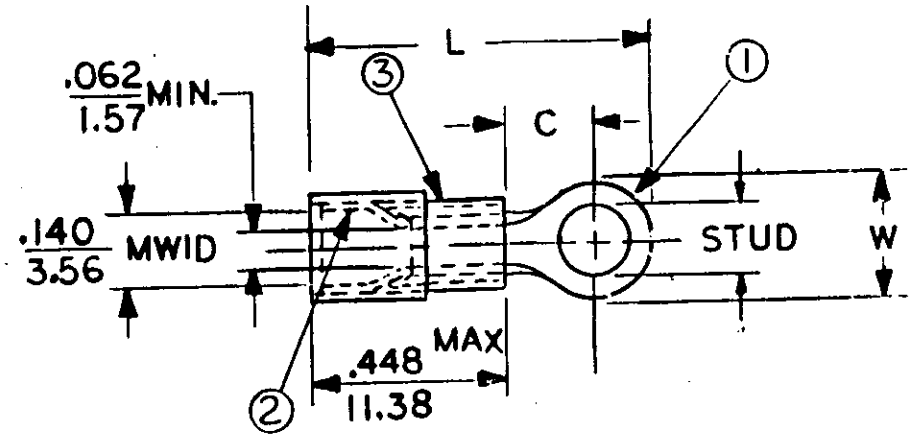

STUD SIZES: (±.005)

02 = .094
04 = .119
06 = .146
08 = .173
10 = .198
14 = .265
56 = .328
38 = .390

"UL" LISTING #E32244
"CSA" LISTING #18689

WIRE SIZE: 22-18 AWG, .25-1.5 MM²

ALL DIMENSIONS = $\frac{\text{INCHES}}{\text{MM}}$ (MWID) = DENOTES MAXIMUM WIRE INSULATION DIAMETER

PART NUMBER	"W" ±.010	"C" MIN.	"L" MAX.				AVAILABLE STUD SIZES	
A-533-	.273 / 6.93	.240 / 6.10	.864 / 21.95				04,06,08,10	

DIMENSIONAL TOLERANCES UNLESS OTHERWISE SPECIFIED			REFERENCE	SCALE: NTS	DATE	TITLE: RING TONGUE TERMINAL AVIKRIMP 500-SERIES	ETC molex INCORPORATED
FRAC.	DEC.	ANG.		DRWN. BY: KO	11-13-84		
±	±	±		CHKD. BY: GZ	12-5-84		DWG. NO. A CUSTOMER DWG
				APPRD. BY:			