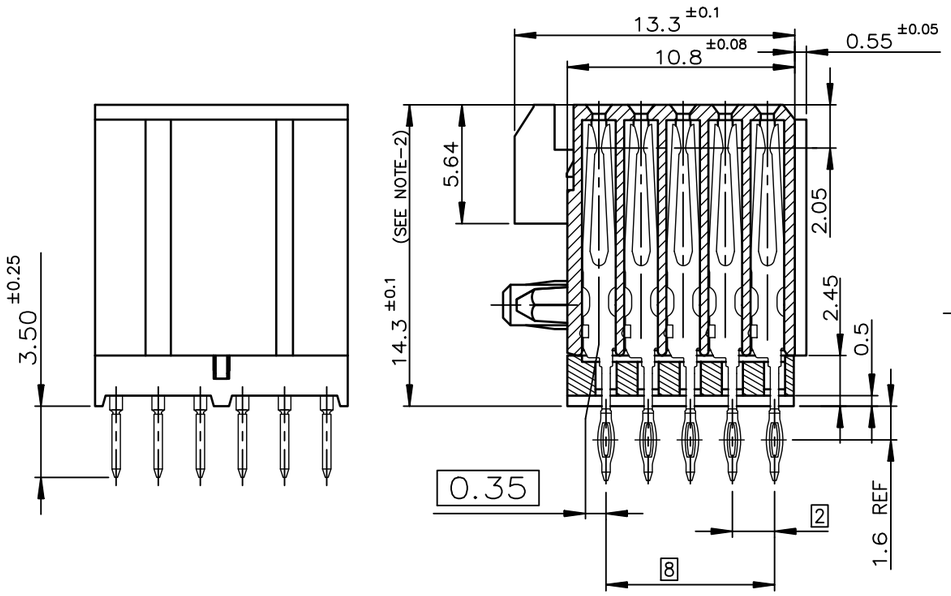

INSERTION TOOLING PROCESS

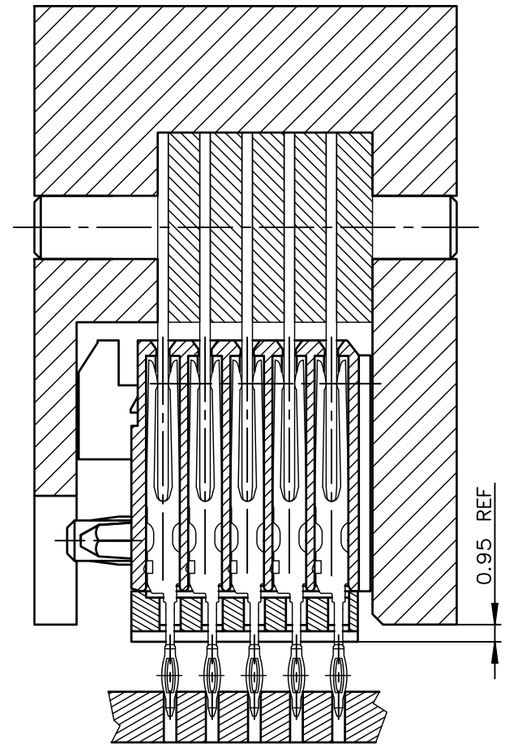

scale 2

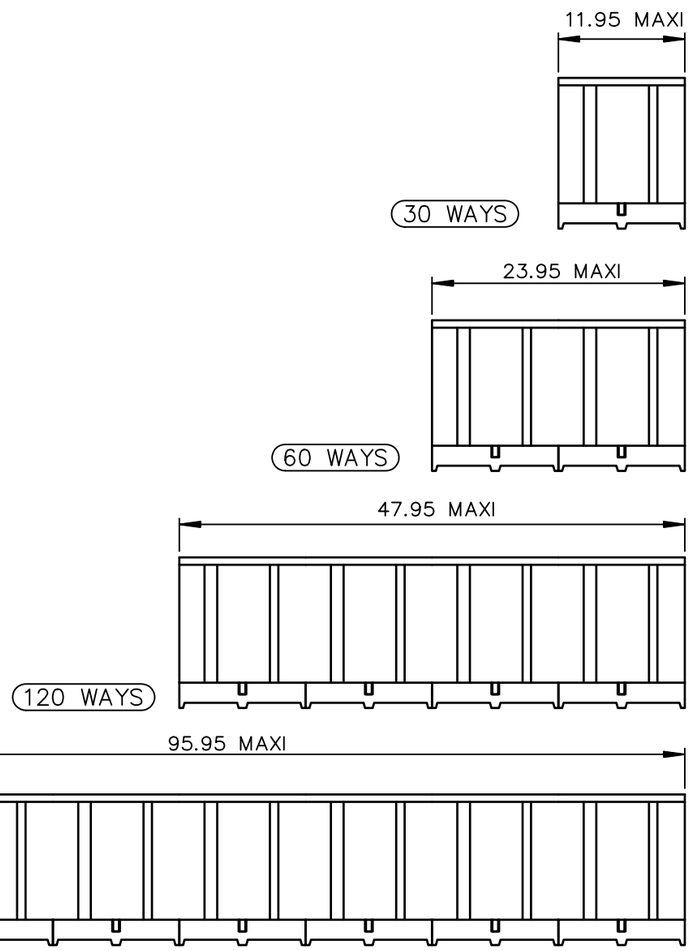

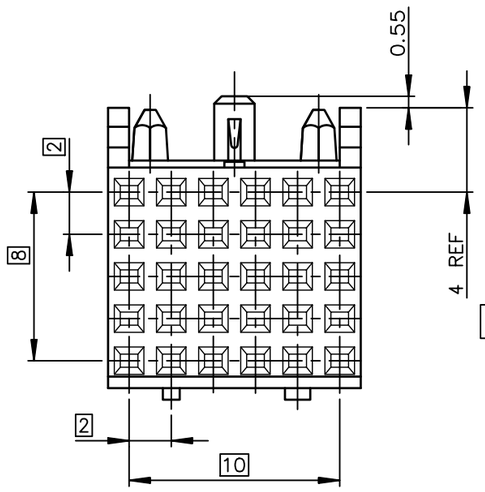

LAYOUT FOR P.C.B
scale : 2.5

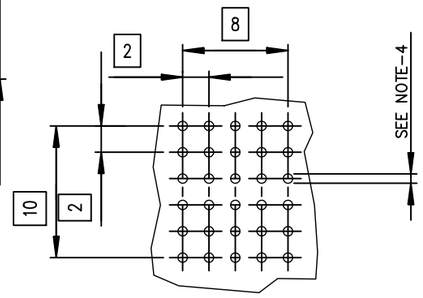

NOTES:

1. MATERIAL : BODY : LCP UL94-V0
   : CONTACT : COPPER ALLOY.
2. PCB FINISH HOLE DIAMETER SEE GS-12-447.
3. COMPATIBLE WITH NARROW AND WIDE BODY.
4. FOR PLATING PERFORMANCE REFER DRAWING #10159409 △L
5. THIS PRODUCT MEETS EUROPEAN UNION DIRECTIVES AND OTHER COUNTRY REGULATIONS AS DESCRIBED IN GS-47- 0004
6. IF SUFFIX "P" IS ADDED IN P/N PACKAGING IS IN TRAYS BUT CONNECTOR MARKING IS WITHOUT "P"
   EXAMPLE: HM1xxxxxxxxHYPLF , MARKED HM1xxxxxxxxHYLF
7. A △L SYMBOL WILL BE NEXT TO ANY DIMENSION, VIEW, OR NOTE WHICH HAS BEEN MODIFIED WITH THE CURRENT DRAWING REVISION.

PART NUMBER

Y REFER DRAWING #10159409 △L

Part Number:	HM1S5xFER000HYLF	
PIN COUNT RANGE	024 WAYS–REPLACE x BY 1	096 WAYS–REPLACE x BY 3
	048 WAYS–REPLACE x BY 2	192 WAYS–REPLACE x BY 4

GENERAL CHARACTERISTICS AND ROHS INFORMATIONS:

SEE GS-12-447

ltr	ecn no	dr	date
J	LS07-0266	MLE	2007-11-06
K	DG09-0385	TER	2009-12-10
L	ELX-I-38915	MINI	2020-10-16

dr	CHAMPION	1992-10-07
engr	ARUN	2020-10-16
chr	ALEX BABU	2020-10-16
appd	SANOJ	2020-10-16

mat'l. code NOTE 1
surface ISO 1302 58
tolerance ISO 406 ISO 1101
tolerances unless otherwise specified
angles 0°±2°
linear 0.X±0.3 / 0.XX±0.13 / 0.XXX±0.050
projection
MM
scale 1:1

product family METRAL
title METRAL FEM. 5ROW STRAIGHT PF
PCB THICKNESS: 2.4mm MINIMUM
dwg no C-8626-0083
sheet 1 of 1
size A2
type Product Customer Drawing

sheet index | revision L | sheet 1

© 2016 AFCI