G12LOC-P07NPH0-0000

series_l, type_g1

General information

Part number	G12LOC-P07NPH0-0000
Termination	crimp
Size	2
Locking principle	break , push
Coding	0_key

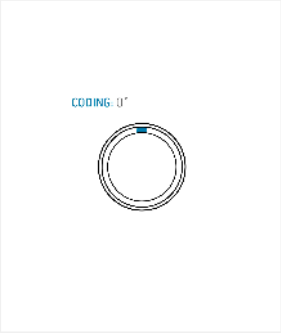

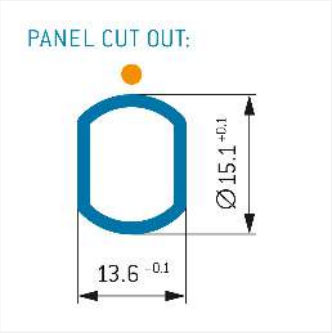

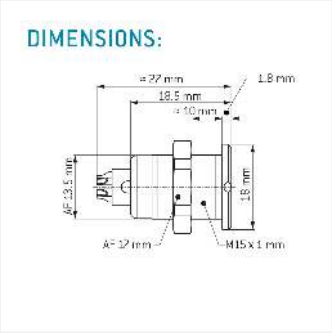

Contact insert description

Number of contacts	7
Contact type	sockets
Contact diameter	13mm
Insulator material	peek
Wire cross section	20-24_awg
Termination	crimp

reverse_gender_on_request

Technical information

Max. creepage and air clearance distance	13_mm	14_mm
Nominal current single contact	12_a	iec_60512_5_2
Nominal current insert	7,8 A	vde_0298_4
Test voltage	18_kv_ac	sae_13441

safety_text

Mechanical and environmental data

Degree of protection*	ip50
Operating temperature	40_120_c
Mating cycles	5000

mated_unmated

Material and surface treatments

Housing	m_chrome
Contact	cu_alloy_gold

safety_text_2
ul_text
illustrative_text