Ratings
Voltage: 30 V
Current: 2.5 A

Operating Temperature Range
-55~85 °C

Materials
1. Insulator: PA4T, UL94 V-0, black
2. Contact: C5191 Phosphor bronze, 20 μ" silver plated
3. Shell: SUS304, >50 μ" nickel plated
4. Blue LED

Electrical Requirements
Dielectric strength: 1 min @ 500 Vac
Insulation resistance: 100 MΩ @ 500 Vdc
Contact resistance: 30 mΩ or less

Mechanical Requirements
Insertion force: 0.4-3.0 kgf
Withdrawal force: 0.4-3.0 kgf
Life cycle: 5000 mating cycles while maintaining 0.4 kgf min. insertion force, 0.4 kgf min. withdrawal force.

Soldering
Solderability: 75% minimum coverage when terminals dipped 2mm in 245 ±5 °C solder bath for 3 ±0.5 seconds
Solder bath durability: no deformation when immersed in 255 ±5 °C up to surface of the board 1.6 mm for 5 seconds or less
Solder iron durability: no deformation when exposed to 300 ±10 °C for 3 ±0.5 seconds

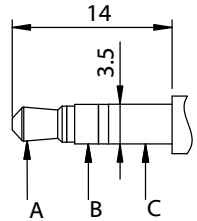

mating plug

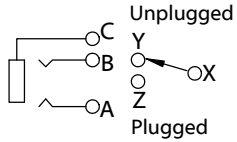

schematic

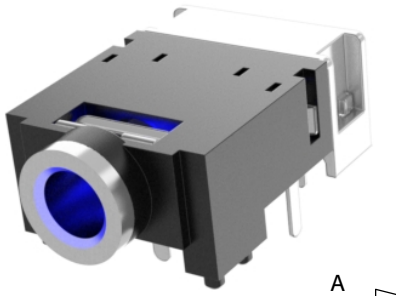

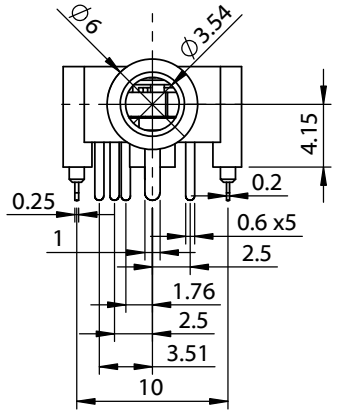

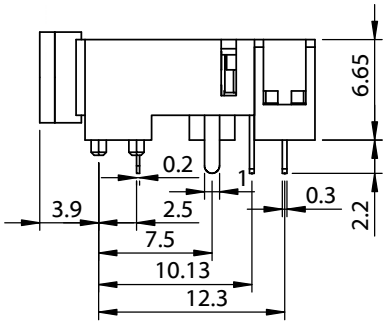

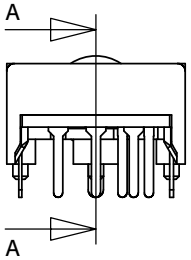

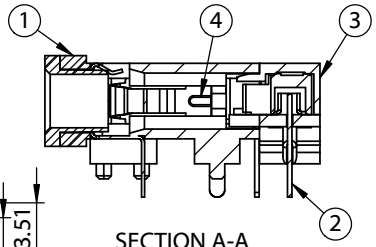

SECTION A-A
SCALE 2 : 1

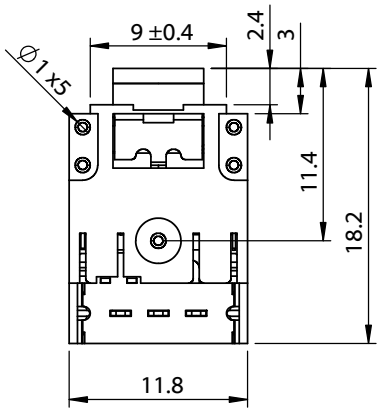

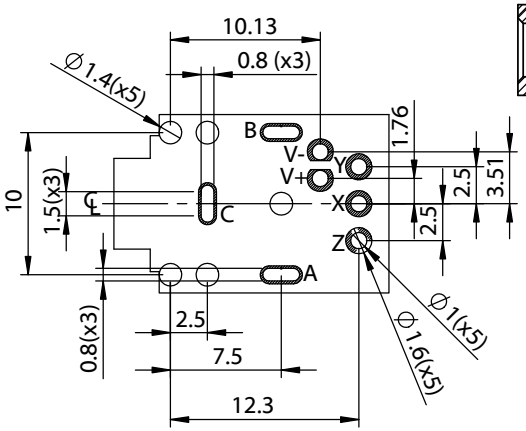

PCB Layout

Reflow Soldering Temperature Profile

Pb - Free Flow Profile

Solder conditions vary depending on reflow soldering equipment.

The surface temperature of the jack must not exceed 260 °C.

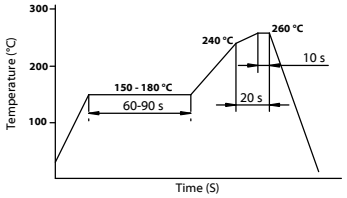

Revision:	Date:	Description:
A	5/10/22	Initial release

Prepared: JD — Digitally signed by JD Date: 2022.05.31 16:54:34 -07'00'

Verified: AG — Digitally signed by AG Date: 2022.07.12 14:06:37 -07'00'

Dimensions are in millimeters.
Tolerances:
X: ± 0.38 mm
X.X: ± 0.25 mm
X.XX: ± 0.15 mm

Notes:
RoHS compliant
Function test: no open, no short circuit, no intermittent

Description:
Connector, 3C audio jack with blue LED, 3.5xL18 mm, thru hole, silver plated

TENSILITY
tel 1.541.323.3228 800 877.670.7118
fax 1.541.323.4202 web tensility.com

Size: A
Part number: 54-00307
Scale: 2:1
Sheet 1 of 2

5 4 3 2 1

Packaging
300 pcs/reel
13 reels/box

Parameter	Condition	Min.	Typical	Max.
Forward Voltage	I = 20 mA	2.70 V		3.50 V
Luminous Intensity	I = 20 mA	200 mcd		500 mcd
Reverse Current	V = 5 V			10 µA
Chromaticity Coordinates	I = 20 mA	462 nm		465 nm
Spectral Line Half-Width	I = 20 mA		30 nm	

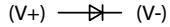

LED configuration
(Common Anode)

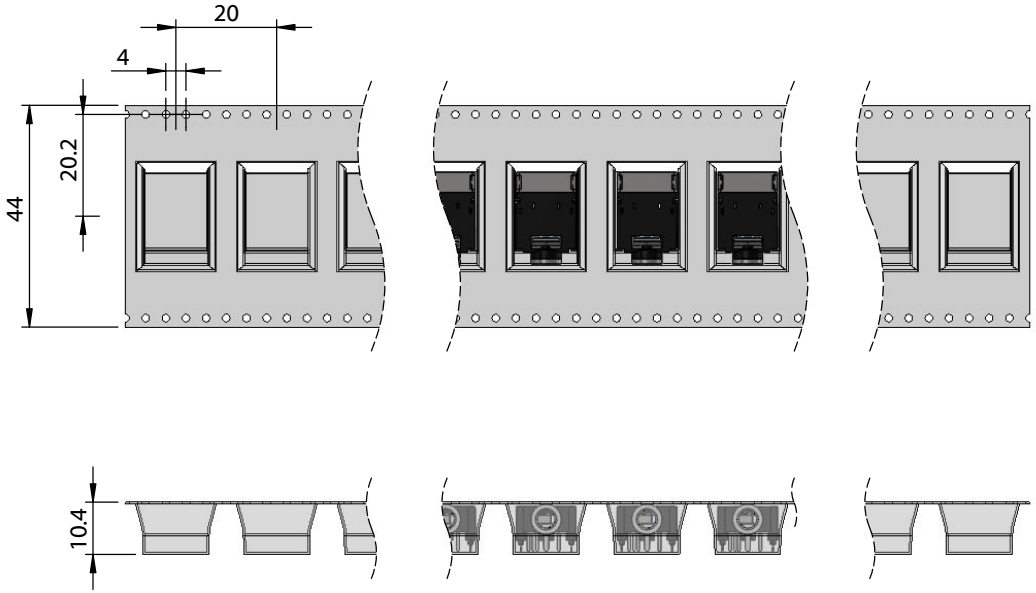

Revision:	Date:	Description:
A	5/10/22	Initial release

Prepared: JD Digitally signed by JD Date: 2022.05.31 16:54:44 -07'00'

Verified: AG Digitally signed by AG Date: 2022.07.12 14:07:35 -07'00'

Notes:

RoHS compliant

Function test: no open, no short circuit, no intermittent

Description:

Connector, 3C audio jack with blue LED, 3.5xL18 mm, thru hole, silver plated

TENSILITY
tel 1.541.323.3228 *800* 877.670.7118
fax 1.541.323.4202 *web* tensility.com

Size: A

Part number: 54-00307

Scale: 1:1.5

To see a custom version of this cable assembly, call Tensility at 541-323-3228 or email engineering@tensility.com

5 4 3 2 1