used for: D-SUB π FILTER

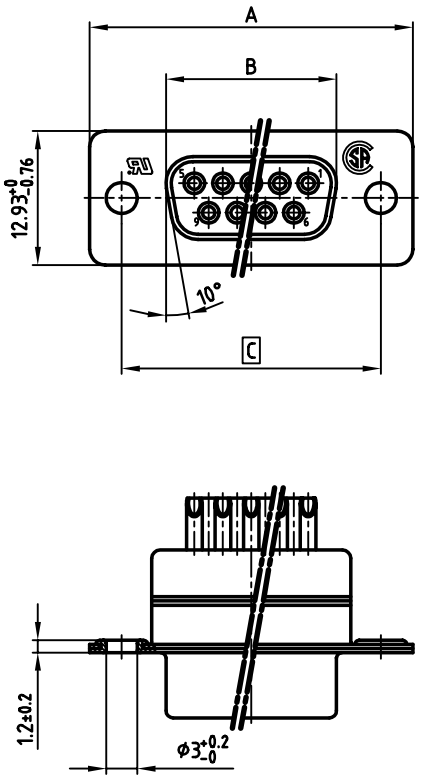

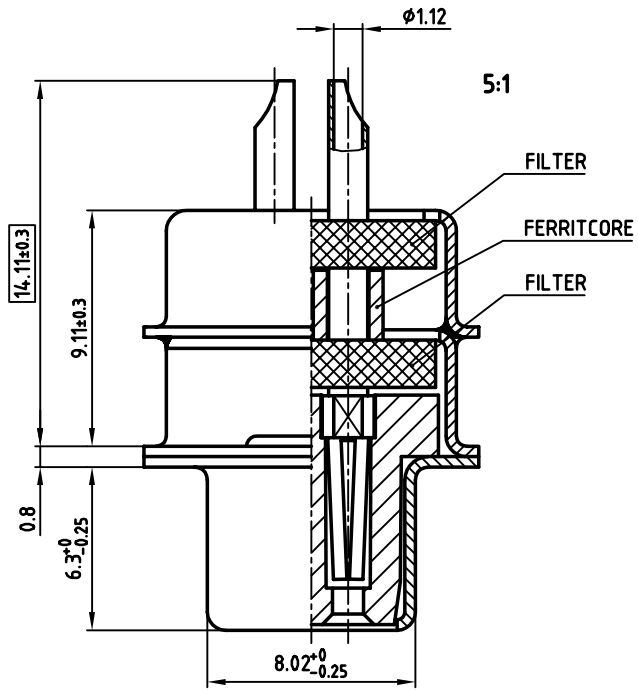

NOTES:

1. METALSHELLS: STEEL; min. 320µ" TIN
2. INSULATORS: PBT GF UL 94 V-0, BLACK
3. CONTACTS: COPPER ALLOY
4. PLATING: min. 8µ" HARD GOLD OVER min. 50µ" NICKEL
   SOLDER CUP ACCEPTS CABLE AWG 20
5. CAPACITANCE: 2 x 180pF ±20%
6. [ ] = CRITICAL DIMENSION: SPC

No. of pos.	A -0.76	B -0.25	C	Part No.
9	31.19	16.46	25.00 +0.12 -0.13	**242A28980X**
15	39.52	24.79	33.30 +0.15 -0.1	**242A28990X**
25	53.42	38.50	47.04 ±0.13	**242A29000X**
37	69.70	54.96	63.50 ±0.13	**242A29010X**

THIS DRAWING MAY NOT BE COPIED OR REPRODUCED IN ANY WAY, AND MAY NOT BE PASSED ON TO A THIRD PARTY WITHOUT WRITTEN PERMISSION. OWNERSHIP AND COPYRIGHT OF CONEC GmbH

DO NOT ALTER CAD DRAWING BY HAND

CONEC CORPORATION
BRAMPTON, ONTARIO

tolerance

rev.	description	date	name

2000	date	name
drawn	25.10.	Parei
appd.	25.10.	E. Mickenbecker
norm	DIN 41652	
d-old		

scale: 2:1 (5:1)
material: SEE NOTES

title:
D-SUB π FILTER FEMALE
SOLDER CUP 9-37pos.

dwg no: **24K1A052A**
AutoCAD 2000 | DIN-A 3 | sh: 1/1

product no: **SEE TABLE**