| ITEM | PART# | DESCRIPTION | QTY | UOM |
|---|---|---|---|---|
| A | 9508040 | KK 156 Crimp Housing 04 Ckt | 1 | PC |
| B | 8500105 | KK 156 TERMINAL CRIMP 18-24 AWG TIN | 4 | PC |
| C | | PAPER PRINTED PAPER WHITE | 1 | PC |

| FROM | TO | DESCRIPTION | COLOR |
|---|---|---|---|
| A1 | -- | 1X18AWG MPPE BK UL11028 | BLACK |
| A2 | -- | 1X18AWG MPPE BK UL11028 | BLACK |
| A3 | -- | 1X18AWG MPPE BK UL11028 | BLACK |
| A4 | -- | 1X18AWG MPPE BK UL11028 | BLACK |

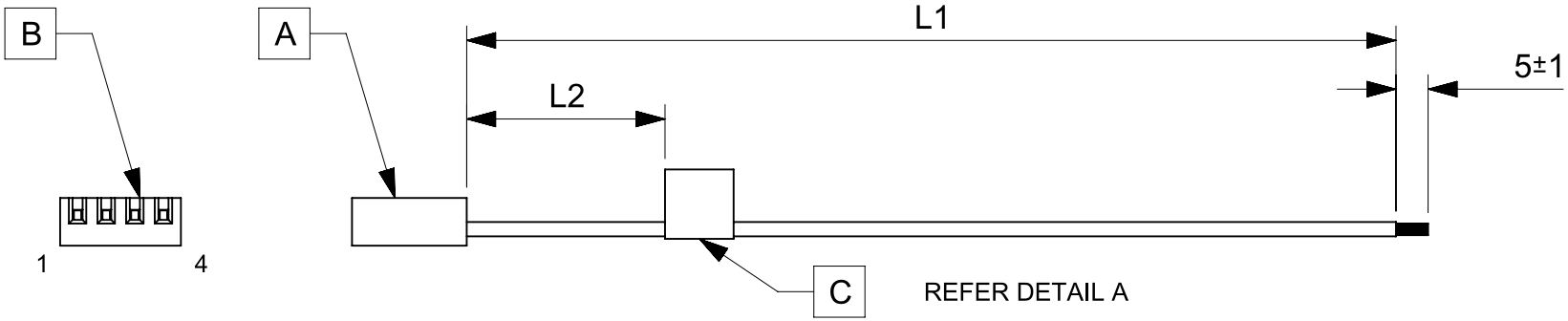


| TABLE | | | |
|---|---|---|---|
| PART NUMBER | L1 | L2 (REF) | TITLE |
| 2196651042 | 150±4 | 50 | KK 3.96 R-S 4ckt 150mm disc Sn |
| 2196651043 | 300±4 | 50 | KK 3.96 R-S 4ckt 300mm disc Sn |
| 2196651044 | 600±6 | 50 | KK 3.96 R-S 4ckt 600mm disc Sn |

NOTES
1. Connector view shown is from mating side.
2. Label text must be 2mm max. in height with Arial font.
3. Label must be wrapped in Flag type on a single cable.
4. Free ends must be stripped, twisted & tinned. The length of tinning is 5±1mm. Tinning Dia must be 1.6 mm Max.

MOLEX P/N
MOLEX
BATCH WK/YR

DETAIL A

| REVISION | | | |
|---|---|---|---|
| DATE | REV | DESCRIPTION | CHANGER |
| 2021/12/27 | A | INITIAL RELEASE | SAIKIG |

THIS DRAWING CONTAINS INFORMATION THAT IS PROPRIETARY TO MOLEX ELECTRONIC TECHNOLOGIES, LLC AND SHOULD NOT BE USED WITHOUT WRITTEN PERMISSION

FUNCTIONAL SYMBOLS
FA = 0
FC = 0
FP = 0
DIVISIONAL SYMBOLS

| DIMENSION UNITS | SCALE |
|---|---|
| mm | NTS |

GENERAL TOLERANCES (UNLESS SPECIFIED)

| | | |
|---|---|---|
| ANGULAR TOL | ± | ° |
| 4 PLACES | ± | |
| 3 PLACES | ± | |
| 2 PLACES | ± | |
| 1 PLACE | ± | |
| 0 PLACES | ± | |

DRAFT WHERE APPLICABLE MUST REMAIN WITHIN DIMENSIONS

CURRENT REV DESC:

EC NO: 691733
DRWN: SAIKIG 2021/12/29
CHK'D: MNARAYAN01 2022/01/19
APPR: MNARAYAN01 2022/01/19

INITIAL REVISION:
DRWN: SAIKIG 2021/12/29
APPR: MNARAYAN01 2022/01/19

molex

SEE TABLE

PRODUCT CUSTOMER DRAWING

| DOCUMENT NUMBER | DOC TYPE | DOC PART | REVISION |
|---|---|---|---|
| 2196651042 | PSD | 000 | A |

| THIRD ANGLE PROJECTION | DRAWING | SERIES | MATERIAL NUMBER | CUSTOMER | SHEET NUMBER |
|---|---|---|---|---|---|
| | A4-SIZE | 219665 | SEE TABLE | GENERAL MARKET | 1 OF 1 |

| DOCUMENT STATUS | P1 | RELEASE DATE | 2022/01/19 05:16:35 |
|---|---|---|---|

FORMAT: master-tb-prod-A4
REVISION: J
DATE: 2020/01/14