SPECIFICATIONS		
PARAMETERS	VALUES	UNITS
RATED VOLTAGE	12	Vdc
OPERATING VOLTAGE RANGE	3 ~ 20	Vdc
RATED CURRENT (MAX)	8	mA
MINIMUM SPL @ 10 CM	95	dBA
RESONANT FREQUENCY	2,900 ± 500	Hz
TONE OR PULSE RATE	CONTINUOUS	0 pulse /sec
OPERATING TEMPERATURE	-20 ~ +70	°C
STORAGE TEMPERATURE	-30 ~ +80	°C
HOUSING MATERIAL	NORYL	-
TERMINAL MATERIAL	Sn PLATED COPPER	-
WEIGHT	6	grams

THIS DOCUMENT CONTAINS DATA PROPRIETARY TO PROJECTS UNLIMITED, INC. ANY USE OR REPRODUCTION, IN ANY FORM, WITHOUT PRIOR WRITTEN PERMISSION OF PROJECTS UNLIMITED, INC. IS PROHIBITED.
©2003, Projects Unlimited Inc.

REVISION HISTORY			
LTR	DESCRIPTION	DATE	APPROVED
-	RELEASED FROM ENGINEERING	3/21/2006	
A	REVISED TONE OR PULSE RATE	1/29/2007	R.W.
B	REVISED UNIT OF VOLTAGE	3/12/2007	D.F.
C	REVISED TO INVENTOR 3-D DRAWING TEMPLATE	1/03/2008	B.R.

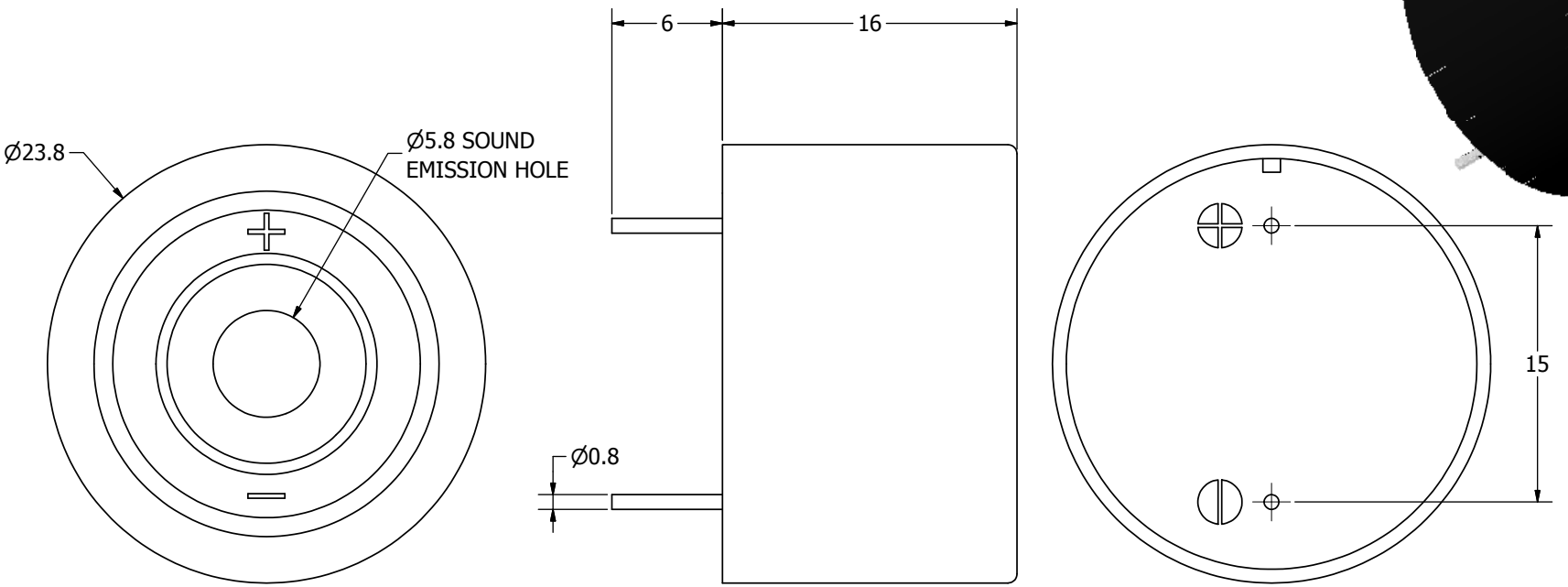

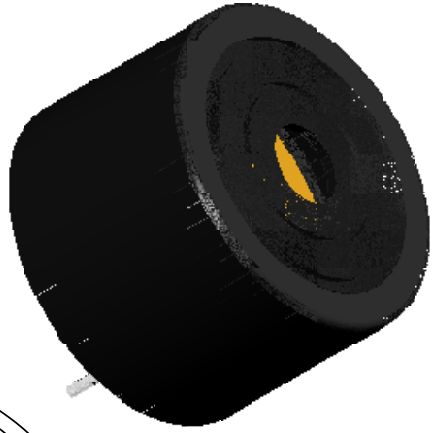

NOTES:

1. ALL DIMENSIONS ARE IN MILLIMETERS.
2. SPECIFICATIONS SUBJECT TO CHANGE OR WITHDRAWL WITHOUT NOTICE.
3. THIS PART IS RoHS 2002/95/EC COMPLIANT.

UNLESS OTHERWISE SPECIFIED: DIMENSIONS ARE IN MILLIMETERS, TOLERANCES ARE ±0.5 AND ANGLES ARE ±3°.	SIZE A3	Designed by	Date	Checked by	Date	Approved by	Date	Drawn Date
		T.G.	3/21/2006	B.R.	3/21/2006	E.P.	3/21/2006	1/3/2008
AI-2429-TT-12V-R.idw		pui audio inc a projects unlimited company		AI-2429-TT-12V-R				
				Indicator			Edition -	Sheet 1 / 1