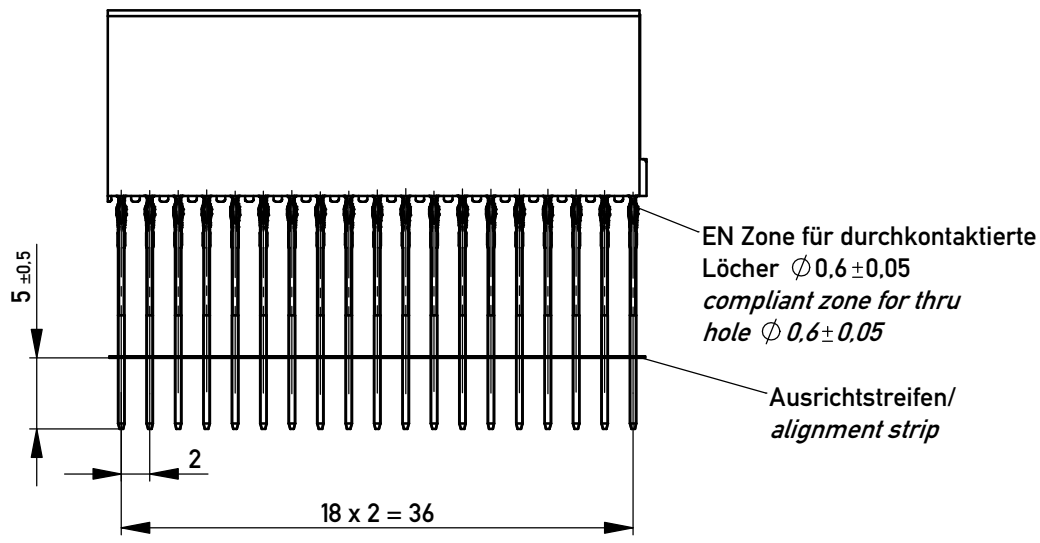


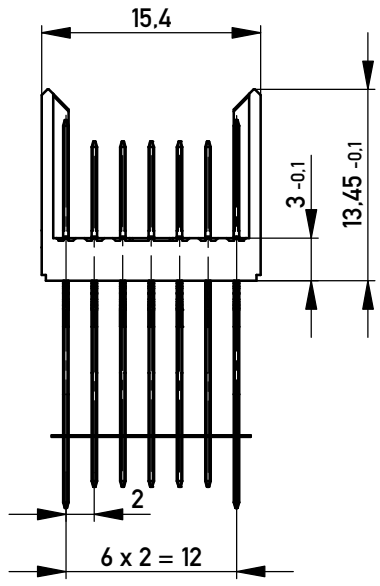


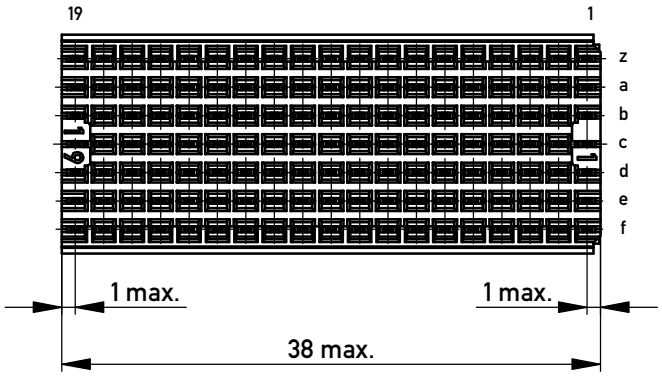


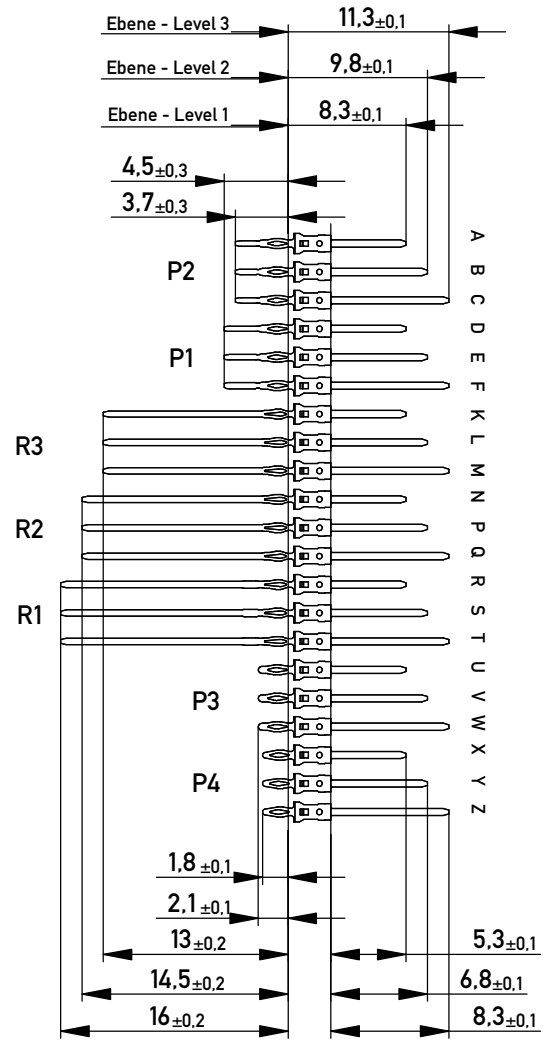


Bestückungsplan / *contact layout*

| 19 | 18 | 17 | 16 | 15 | 14 | 13 | 12 | 11 | 10 | 9 | 8 | 7 | 6 | 5 | 4 | 3 | 2 | 1 | |
|---|---|---|---|---|---|---|---|---|---|---|---|---|---|---|---|---|---|---|---|
| T | T | T | T | T | T | T | T | T | T | T | T | T | T | T | T | T | T | T | z |
| P | P | P | P | P | P | P | P | P | P | P | P | P | P | P | P | P | P | P | a |
| P | P | P | P | P | P | P | P | P | P | P | P | P | P | P | P | P | P | P | b |
| P | P | P | P | P | P | P | P | P | P | P | P | P | P | P | P | P | P | P | c |
| P | P | P | P | P | P | P | P | P | P | P | P | P | P | P | P | P | P | P | d |
| P | P | P | P | P | P | P | P | P | P | P | P | P | P | P | P | P | P | P | e |
| T | T | T | T | T | T | T | T | T | T | T | T | T | T | T | T | T | T | T | f |

Lochbild für Leiterplatte
(Bestückungsseite)

*Board hole pattern*
*(Component mounting side)*

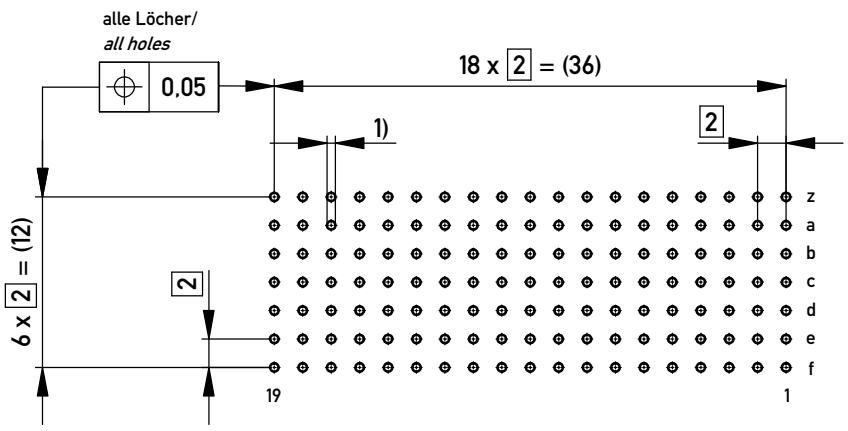


1) ∅ 0,6 ±0,05 Durchmesser des metallisierten Loches
∅ *0,6 ±0,05 Diameter of finished plated-through hole*

Schichtaufbau im metallisierten Loch siehe Zeichnung 164062 Nr. 1
*Metal plating of plated-through hole see drawing 164062 No. 1*

Fehlende Maße und Angaben nach IEC 61076-4-101
*Missing information and dimensions per IEC 61076-4-101*

Copyright by ERNI Production GmbH & Co. KG
Proprietary notice pursuant to ISO 16016 to be observed.

Information:
R1, R2 Level 2, 3
siehe Bestückungsplan / *see contact layout*
Anforderungsstufe 2 / *class 2*

Tolerances

All Dimensions in mm

Scale 2:1

Angaben zu entsprechender Ident-Nr. siehe Fertigungsunterlagen
*For further information about I.D. number see manufacturing document*

All rights reserved.
Only for Information.
To ensure that this is the latest version of this drawing, please contact one of the ERNI companies before using.

Subject to modification without prior notice.
Drawing will not be updated.

Designation

ERmet Messerleiste B19

*ERmet Male Wide Type B19*

ERNI www.ERNI.com

923132

I

A3

| Index | | Date | |
|---|---|---|---|
| c | | 23.01.2018 | |

Class ERMB19