THIS DRAWING CONTAINS INFORMATION PROPRIETARY TO RF INDUSTRIES,
ANY UNAUTHORIZED USE OF THIS DRAWING IS EXPRESSLY PROHIBITED
WITHOUT WRITTEN PERMISSION FROM RF INDUSTRIES.
ANY VIOLATION IS PUNISHABLE UNDER U.S. COPYRIGHT LAWS.

ALL DIMENSIONS ARE REFERENCE ONLY

PART NO. **RFF-1401-Q**

REV	DESCRIPTION	DWN	DATE	APPROVED
–	ENGINEERING RELEASE	CZS	10/21/04	JDMc

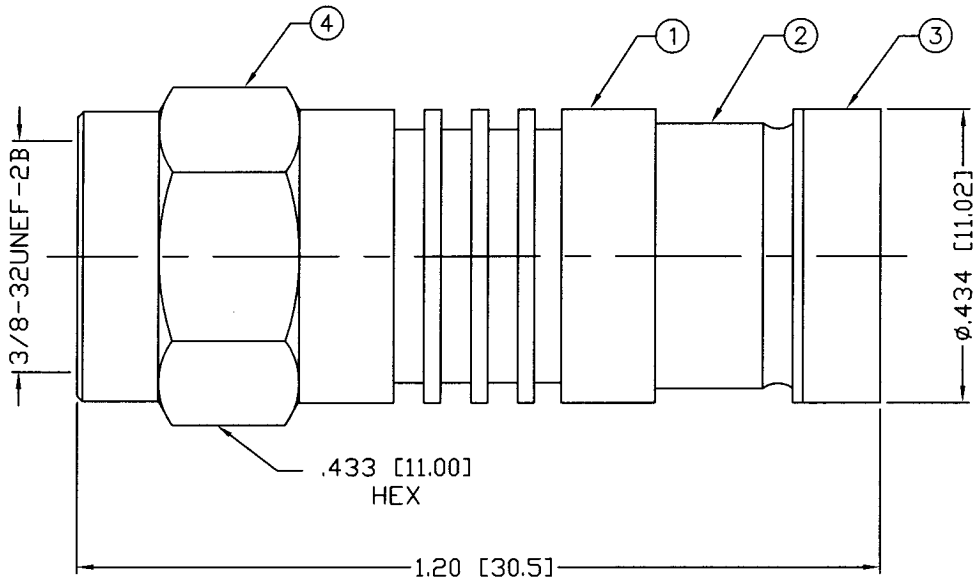

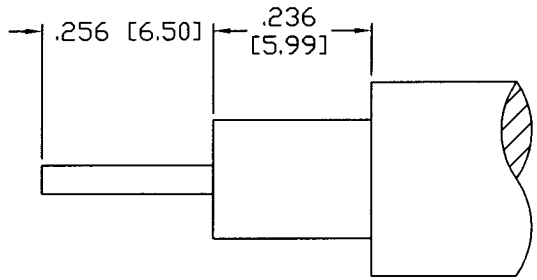

RECOMMENDED STRIPPING DIMENSIONS

USE RFA-4004-20 CRIMP TOOL

SPECIFICATIONS:

IMPEDANCE: 75 Ohms
FREQUENCY RANGE: SEE CABLE MANUFACTURER SPECS
FOR RG-6/U TYPE; BELDEN 1694A, 9248; COMMSCOPE 5715, 5729, 5765

#	DESCRIPTION	QTY	MATERIAL	FINISH
1	BODY	1	BRASS	NICKEL, 100μ"
2	COMPRESSION PLASTIC	1	---	---
3	RING	1	BRASS	NICKEL, 100μ"
4	SHELL	1	BRASS	NICKEL, 100μ"
5				
6				
7				
8				
9				
10				
11				
12				
13				
14				

APPROVALS	DATE
DRAWN C. ZUNIGA	10/21/04
CHECKED JMc	10/21/04
ORJ DRAWN C. ZUNIGA	10/21/04

UNLESS OTHERWISE SPECIFIED:

DIMENSIONS ARE IN INCHES AND [MILLIMETERS]
UNLESS OTHERWISE NOTED TOLERANCES ARE:
DECIMALS | DIAMETER

RF connectors
DIVISION OF RF INDUSTRIES, LTD.
7610 MIRAMAR RD
SAN DIEGO, CA 92126
(858) 549-6340
(858) 549-6345 FAX

F PLUG

COMPRESSION CLAMP, WATERPROOF

SIZE	CABLE GROUP	DWG NO.	REV
A	Q	RFF-1401-Q	—

SCALE: NTS | CAD FILE OUTLINE | SHEET 1 OF 1