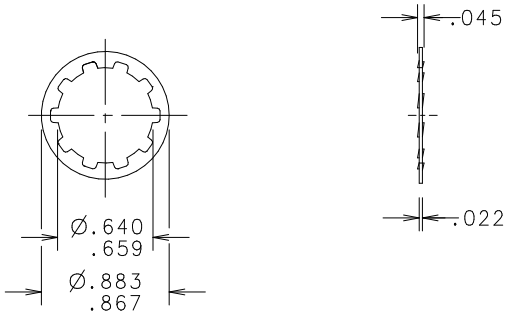

NOTE:

AS SUPPLIED BY SHAKEPROOF
#1228-02 OR APPROVED EQUAL.

NO	COMPONENT NO	DESCRIPTION	QTY/M	U/M
2				
1				

BILL OF MATERIAL

UNLESS OTHERWISE SPECIFIED, DIMENSIONS DO NOT INCLUDE PLATING.

O	DENOTES CRITICAL CHARACTERISTICS.
CPK	DENOTES CPK DIMENSIONS,-MINIMUM CPK VALUE
⟨ST⟩	DENOTES A CHARACTERISTIC THAT PROVIDES AN INDICATION OF PROCESS PERFORMANCE. PROCEDURE FOR MEASUREMENT AND TRACKING TO BE DEFINED IN LITTELFUSE INSPECTION INSTRUCTIONS.
CP	DENOTES CP DIMENSIONS,-MINIMUM CP VALUE MUST BE WITHIN THE DIMENSIONAL LIMITATIONS SHOWN ON DRAWING AND INITIALLY LOCATED TO ALLOW FOR MAXIMUM TOOL LIFE.

LTR	REVISION	CHK	APD
D	390416C-REVISE & REDRAWN IN NEW STRUCTURE 3/30/98 KAM		

COPIES TO

1	9	18
2	10	19
3	12	20
4	13	21
5	14	23
6	15	33
7	16	43
8	17	53

MATL SPEC: STEEL		FINISH: .0005 ZINC CRONAK- OR .0005 ZINC IRIDITE.
DRW: KAM	DATE: 12/10/97	SCALE: FULL
CHK	DATE	SUPER DRW
APPD	DATE	RAW STK WT LBS/M

TOLERANCE UNLESS OTHERWISE SPECIFIED

TWO PLACE DEC	±.01	FRACTION	±
THREE PLACE DEC	±.005	ANGULAR	±

TITLE

LOCKWASHER - INTERNAL

Littelfuse®

DES PLAINES, ILLINOIS 60016

REVISION | DRWG. NO.

-905-010

UNCONTROLLED DOCUMENT

CAD GENERATED DRAWING - NO PENCIL CHANGES ALLOWED