PRODUCT NUMBER
89076-XYY(L)LF

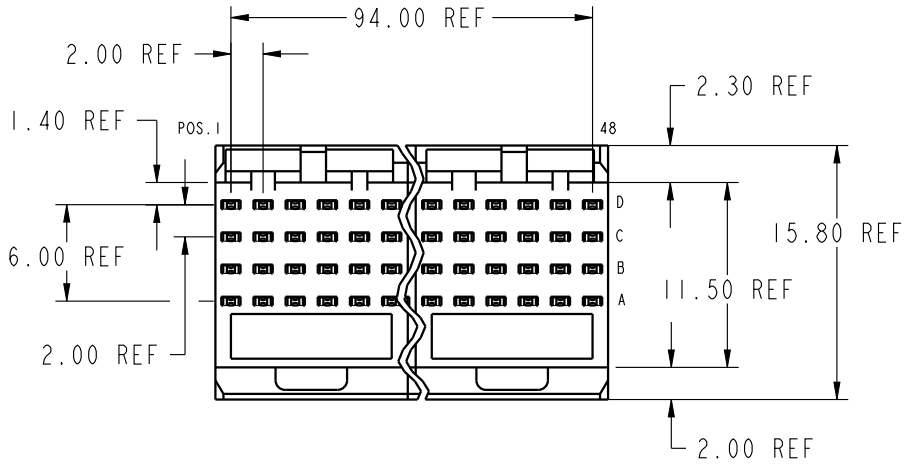

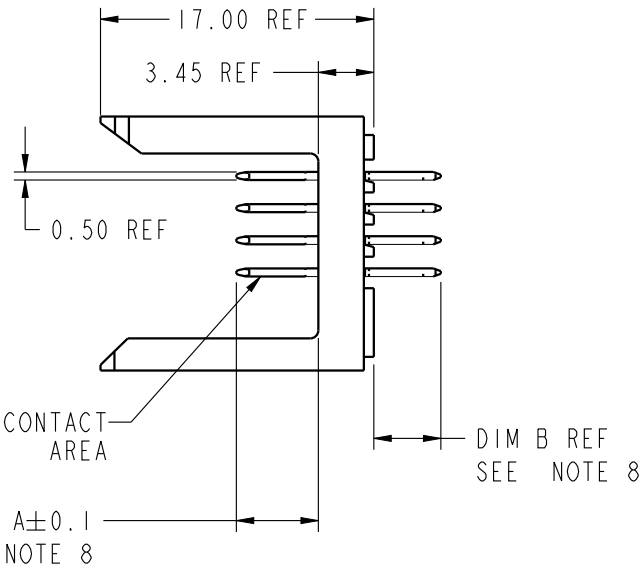

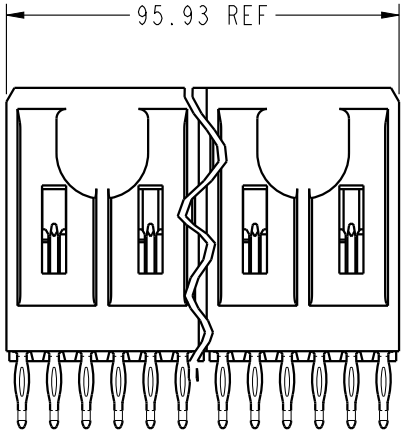

PART NUMBER : 89076-XYY(L)LF

L REFER LUBRICATED (OPTIONAL) △
SEE NOTE 4

X REFER PLATING PERFORMANCE △
SEE NOTE 4

spec ref	*			dr	Terran Huang	2010/11/03	projection	MM
tolerance std	TOLERANCES UNLESS OTHERWISE SPECIFIED			eng	Rahul Mohan-M	2021/08/16		size A4 / scale 21:10
ISO 406 ISO 1101				chr	-	-		ecn no ELX-I-41803-1
				appr	Kuriakose, San	2021/08/16	product family METRAL	rel level Released
surface	linear	0.X	±0.3	Amphenol FCi	title METRAL SIGNAL HEADER		dwg no 89076	rev V
		0.XX	±0.13		8 MOD, 4 ROW PRESS-FIT			
		0.XXX	±0.050					
ISO 1302	angular	0°	±2°	amphenol-icc.com	cat. no. *	Product - Customer Drw		sheet 1 of 11

Creo File:ELX-MC-A4C,REV F,2020-12-21

© 2020 Amphenol Corporation

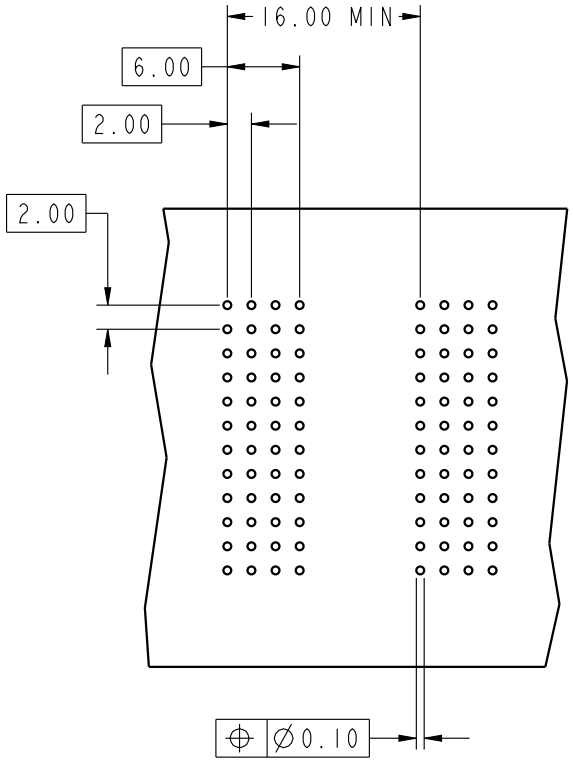

REQUIRED PC BOARD LAYOUT
COMPONENT SIDE
SEE PRINT 58351 FOR
ADDITIONAL PCB INFORMATION

KEY		
CODE	DIMENSIONS	
	DIM "A" MATE	DIM "B" TAIL
1	5.00	4.30
2	5.75	4.30
3	6.50	4.30
4	7.25	4.30
7	6.50	13.60
8	7.25	13.60
11	6.50	17.00
12	7.25	17.00
19	8.00	4.30
20	8.00	13.60
21	8.00	17.00
22	5.00	12.10
25	5.75	15.60
40	5.00	15.60
41	6.50	15.60
42	7.25	15.60
43	8.00	15.60
59	5.00	11.80
60	5.75	11.80
61	6.50	11.80
62	7.25	11.80
63	8.00	11.80

spec ref	*			dr	Terran Huang	2010/11/03	projection
tolerance std	TOLERANCES UNLESS OTHERWISE SPECIFIED			eng	Rahul Mohan-M	2021/08/16	MM
ISO 406 ISO 1101				chr	-	-	
				appr	Kuriakose, San	2021/08/16	product family METRAL
surface 3.200	linear	0.X	±0.3	Amphenol FCi	title METRAL SIGNAL HEADER 8 MOD, 4 ROW PRESS-FIT	dwg no 89076	rev V
		0.XX	±0.13				
		0.XXX	±0.050				
ISO 1302	angular	0°	±2°	amphenol-icc.com	cat. no. -	Product - Customer Drw	sheet 2 of 11

size	A4
scale	1:10
ecn no	ELX-I-41803-1
rel level	Released

Creo File:ELX-MC-A4C,REV F,2020-12-21

© 2020 Amphenol Corporation

METRAL P/N		CONTACT CODE MOD. 1						MOD. 2						MOD. 3						MOD. 4						MOD. 5						MOD. 6						MOD. 7						MOD. 8					
	ROW	1	2	3	4	5	6	7	8	9	10	11	12	13	14	15	16	17	18	19	20	21	22	23	24	25	26	27	28	29	30	31	32	33	34	35	36	37	38	39	40	41	42	43	44	45	46	47	48
89076-X11LF	D	22	22	22	22	22	22	22	22	22	22	22	22	22	22	22	22	22	22	22	22	22	22	22	22	22	22	22	22	22	22	22	22	22	22	22	22	22	22	22	22	22	22	22	22	22	22	22	22
	C	22	22	22	22	22	22	22	22	22	22	22	22	22	22	22	22	22	22	22	22	22	22	22	22	22	22	22	22	22	22	22	22	22	22	22	22	22	22	22	22	22	22	22	22	22	22	22	22
	B	22	22	22	22	22	22	22	22	22	22	22	22	22	22	22	22	22	22	22	22	22	22	22	22	22	22	22	22	22	22	22	22	22	22	22	22	22	22	22	22	22	22	22	22	22	22	22	22
	A	22	22	22	22	22	22	22	22	22	22	22	22	22	22	22	22	22	22	22	22	22	22	22	22	22	22	22	22	22	22	22	22	22	22	22	22	22	22	22	22	22	22	22	22	22	22	22	22

METRAL P/N		CONTACT CODE MOD. 1						MOD. 2						MOD. 3						MOD. 4						MOD. 5						MOD. 6						MOD. 7						MOD. 8					
	ROW	1	2	3	4	5	6	7	8	9	10	11	12	13	14	15	16	17	18	19	20	21	22	23	24	25	26	27	28	29	30	31	32	33	34	35	36	37	38	39	40	41	42	43	44	45	46	47	48
89076-X12LF	D	3	3	3	3	3	3	3	3	3	3	3	3	3	3	3	3	3	3	3	3	3	3	3	3	3	3	3	3	3	3	3	3	3	3	3	3	3	3	3	3	3	3	3	3	3	3	3	3
	C	4	4	4	4	4	4	4	4	4	4	4	4	4	4	4	4	4	4	4	4	4	4	4	4	4	4	4	4	4	4	4	4	4	4	4	4	4	4	4	4	4	4	4	4	4	4	4	4
	B	19	19	19	19	19	19	19	19	19	19	19	19	19	19	19	19	19	19	19	19	19	19	19	19	19	19	19	19	19	19	19	19	19	19	19	19	19	19	19	19	19	19	19	19	19	19	19	19
	A	19	19	19	19	19	19	19	19	19	19	19	19	19	19	19	19	19	19	19	19	19	19	19	19	19	19	19	19	19	19	19	19	19	19	19	19	19	19	19	19	19	19	19	19	19	19	19	19

METRAL P/N		CONTACT CODE MOD. 1						MOD. 2						MOD. 3						MOD. 4						MOD. 5						MOD. 6						MOD. 7						MOD. 8					
	ROW	1	2	3	4	5	6	7	8	9	10	11	12	13	14	15	16	17	18	19	20	21	22	23	24	25	26	27	28	29	30	31	32	33	34	35	36	37	38	39	40	41	42	43	44	45	46	47	48
89076-X13LF	D	3	3	3	3	3	3	3	3	3	3	3	3	3	3	3	3	3	3	3	3	3	3	3	3	3	3	3	3	3	3	3	3	3	3	3	3	3	3	3	3	3	3	3	3	3	3	3	3
	C	3	3	3	3	3	3	3	3	3	3	3	3	3	3	3	3	3	3	3	3	3	3	3	3	3	3	3	3	3	3	3	3	3	3	3	3	3	3	3	3	3	3	3	3	3	3	3	3
	B	19	19	19	19	19	19	19	19	19	19	19	19	19	19	19	19	19	19	19	19	19	19	19	19	19	19	19	19	19	19	19	19	19	19	19	19	19	19	19	19	19	19	19	19	19	19	19	19
	A	3	3	3	3	3	3	3	3	3	3	3	3	3	3	3	3	3	3	3	3	3	3	3	3	3	3	3	3	3	3	3	3	3	3	3	3	3	3	3	3	3	3	3	3	3	3	3	3

METRAL P/N		CONTACT CODE MOD. 1						MOD. 2						MOD. 3						MOD. 4						MOD. 5						MOD. 6						MOD. 7						MOD. 8					
	ROW	1	2	3	4	5	6	7	8	9	10	11	12	13	14	15	16	17	18	19	20	21	22	23	24	25	26	27	28	29	30	31	32	33	34	35	36	37	38	39	40	41	42	43	44	45	46	47	48
89076-X14LF	D	4	4	4	4	4	4	4	4	4	4	4	4	4	4	4	4	4	4	4	4	4	4	4	4	4	4	4	4	4	4	4	4	4	4	4	4	4	4	4	4	4	4	4	4	4	4	4	4
	C	4	4	4	4	4	4	4	4	4	4	4	4	4	4	4	4	4	4	4	4	4	4	4	4	4	4	4	4	4	4	4	4	4	4	4	4	4	4	4	4	4	4	4	4	4	4	4	4
	B	4	4	4	4	4	4	4	4	4	4	4	4	4	4	4	4	4	4	4	4	4	4	4	4	4	4	4	4	4	4	4	4	4	4	4	4	4	4	4	4	4	4	4	4	4	4	4	4
	A	4	4	4	4	4	4	4	4	4	4	4	4	4	4	4	4	4	4	4	4	4	4	4	4	4	4	4	4	4	4	4	4	4	4	4	4	4	4	4	4	4	4	4	4	4	4	4	4

METRAL P/N		CONTACT CODE MOD. 1						MOD. 2						MOD. 3						MOD. 4						MOD. 5						MOD. 6						MOD. 7						MOD. 8					
	ROW	1	2	3	4	5	6	7	8	9	10	11	12	13	14	15	16	17	18	19	20	21	22	23	24	25	26	27	28	29	30	31	32	33	34	35	36	37	38	39	40	41	42	43	44	45	46	47	48
89076-X15LF	D	59	59	59	59	59	59	59	59	59	59	59	59	59	59	59	59	59	59	59	59	59	59	59	59	59	59	59	59	59	59	59	59	59	59	59	59	59	59	59	59	59	59	59	59	59	59	59	59
	C	59	59	59	59	59	59	59	59	59	59	59	59	59	59	59	59	59	59	59	59	59	59	59	59	59	59	59	59	59	59	59	59	59	59	59	59	59	59	59	59	59	59	59	59	59	59	59	59
	B	59	59	59	59	59	59	59	59	59	59	59	59	59	59	59	59	59	59	59	59	59	59	59	59	59	59	59	59	59	59	59	59	59	59	59	59	59	59	59	59	59	59	59	59	59	59	59	59
	A	59	59	59	59	59	59	59	59	59	59	59	59	59	59	59	59	59	59	59	59	59	59	59	59	59	59	59	59	59	59	59	59	59	59	59	59	59	59	59	59	59	59	59	59	59	59	59	59

spec ref	*	dr	Terran Huang	2010/11/03	projection	MM	size A4 / scale 1:10
tolerance std: ISO 406, ISO 1101	TOLERANCES UNLESS OTHERWISE SPECIFIED	eng	Rahul Mohan-M	2021/08/16			ecn no: ELX-I-41803-1
		chr	-	-			
		appr	Kuriakose, San	2021/08/16	product family	METRAL	rel level: Released
surface 3.200 ISO 1302	linear 0.X ±0.3; 0.XX ±0.13; 0.XXX ±0.050; angular 0° ±2°	Amphenol FCi	amphenol-icc.com	title: METRAL SIGNAL HEADER, 8 MOD, 4 ROW PRESS-FIT	dwg no 89076	rev V	
			cat. no. -	Product - Customer Drw	sheet 3 of 11		

Creo File:ELX-MC-A4C,REV F,2020-12-21

© 2020 Amphenol Corporation

METRAL P/N		CONTACT CODE MOD. 1						MOD. 2						MOD. 3						MOD. 4						MOD. 5						MOD. 6						MOD. 7						MOD. 8					
	ROW	1	2	3	4	5	6	7	8	9	10	11	12	13	14	15	16	17	18	19	20	21	22	23	24	25	26	27	28	29	30	31	32	33	34	35	36	37	38	39	40	41	42	43	44	45	46	47	48
89076-X16LF	D	59	59	59	59	59	59	59	59	59	59	59	59	59	59	59	59	59	59	59	59	59	59	59	59	59	59	59	59	59	59	59	59	59	59	59	59	59	59	59	59	59	59	59	59	59	59	59	59
	C	59	59	59	59	59	59	59	59	59	59	59	59	59	59	59	59	59	59	59	59	59	59	59	59	59	59	59	59	59	59	59	59	59	59	59	59	59	59	59	59	59	59	59	59	59	59	59	59
	B	59	59	59	59	59	59	59	59	59	59	59	59	59	59	59	59	59	59	59	59	59	59	59	59	59	59	59	59	59	59	59	59	59	59	59	59	59	59	59	59	59	59	59	59	59	59	59	59
	A	61	61	61	61	61	61	61	61	61	61	61	61	61	61	61	61	61	61	61	61	61	61	61	61	61	61	61	61	61	61	61	61	61	61	61	61	61	61	61	61	61	61	61	61	61	61	61	61

METRAL P/N		CONTACT CODE MOD. 1						MOD. 2						MOD. 3						MOD. 4						MOD. 5						MOD. 6						MOD. 7						MOD. 8					
	ROW	1	2	3	4	5	6	7	8	9	10	11	12	13	14	15	16	17	18	19	20	21	22	23	24	25	26	27	28	29	30	31	32	33	34	35	36	37	38	39	40	41	42	43	44	45	46	47	48
89076-X17LF	D	61	61	61	61	61	61	61	61	61	61	61	61	61	61	61	61	61	61	61	61	61	61	61	61	61	61	61	61	61	61	61	61	61	61	61	61	61	61	61	61	61	61	61	61	61	61	61	61
	C	60	60	60	60	60	60	60	60	60	60	60	60	60	60	60	60	60	60	60	60	60	60	60	60	60	60	60	60	60	60	60	60	60	60	60	60	60	60	60	60	60	60	60	60	60	60	60	60
	B	60	60	60	60	60	60	60	60	60	60	60	60	60	60	60	60	60	60	60	60	60	60	60	60	60	60	60	60	60	60	60	60	60	60	60	60	60	60	60	60	60	60	60	60	60	60	60	60
	A	61	61	61	61	61	61	61	61	61	61	61	61	61	61	61	61	61	61	61	61	61	61	61	61	61	61	61	61	61	61	61	61	61	61	61	61	61	61	61	61	61	61	61	61	61	61	61	61

METRAL P/N		CONTACT CODE MOD. 1						MOD. 2						MOD. 3						MOD. 4						MOD. 5						MOD. 6						MOD. 7						MOD. 8					
	ROW	1	2	3	4	5	6	7	8	9	10	11	12	13	14	15	16	17	18	19	20	21	22	23	24	25	26	27	28	29	30	31	32	33	34	35	36	37	38	39	40	41	42	43	44	45	46	47	48
89076-X18LF	D	61	61	61	61	61	61	61	61	61	61	61	61	61	61	61	61	61	61	61	61	61	61	61	61	61	61	61	61	61	61	61	61	61	61	61	61	61	61	61	61	61	61	61	61	61	61	61	61
	C	61	61	61	61	61	61	61	61	61	61	61	61	61	61	61	61	61	61	61	61	61	61	61	61	61	61	61	61	61	61	61	61	61	61	61	61	61	61	61	61	61	61	61	61	61	61	61	61
	B	61	61	61	61	61	61	61	61	61	61	61	61	61	61	61	61	61	61	61	61	61	61	61	61	61	61	61	61	61	61	61	61	61	61	61	61	61	61	61	61	61	61	61	61	61	61	61	61
	A	61	61	61	61	61	61	61	61	61	61	61	61	61	61	61	61	61	61	61	61	61	61	61	61	61	61	61	61	61	61	61	61	61	61	61	61	61	61	61	61	61	61	61	61	61	61	61	61

METRAL P/N		CONTACT CODE MOD. 1						MOD. 2						MOD. 3						MOD. 4						MOD. 5						MOD. 6						MOD. 7						MOD. 8					
	ROW	1	2	3	4	5	6	7	8	9	10	11	12	13	14	15	16	17	18	19	20	21	22	23	24	25	26	27	28	29	30	31	32	33	34	35	36	37	38	39	40	41	42	43	44	45	46	47	48
89076-X19LF	D	60	60	60	60	60	60	60	60	60	60	60	60	60	60	60	60	60	60	60	60	60	60	60	60	60	60	60	60	60	60	60	60	60	60	60	60	60	60	60	60	60	60	60	60	60	60	60	60
	C	60	60	60	60	60	60	60	60	60	60	60	60	60	60	60	60	60	60	60	60	60	60	60	60	60	60	60	60	60	60	60	60	60	60	60	60	60	60	60	60	60	60	60	60	60	60	60	60
	B	62	62	62	62	62	62	62	62	62	62	62	62	62	62	62	62	62	62	62	62	62	62	62	62	62	62	62	62	62	62	62	62	62	62	62	62	62	62	62	62	62	62	62	62	62	62	62	62
	A	60	60	60	60	60	60	60	60	60	60	60	60	60	60	60	60	60	60	60	60	60	60	60	60	60	60	60	60	60	60	60	60	60	60	60	60	60	60	60	60	60	60	60	60	60	60	60	60

METRAL P/N		CONTACT CODE MOD. 1						MOD. 2						MOD. 3						MOD. 4						MOD. 5						MOD. 6						MOD. 7						MOD. 8					
	ROW	1	2	3	4	5	6	7	8	9	10	11	12	13	14	15	16	17	18	19	20	21	22	23	24	25	26	27	28	29	30	31	32	33	34	35	36	37	38	39	40	41	42	43	44	45	46	47	48
89076-X20LF	D	61	61	61	61	61	61	61	61	61	61	61	61	61	61	61	61	61	61	61	61	61	61	61	61	61	61	61	61	61	61	61	61	61	61	61	61	61	61	61	61	61	61	61	61	61	61	61	61
	C	62	62	62	62	62	62	62	62	62	62	62	62	62	62	62	62	62	62	62	62	62	62	62	62	62	62	62	62	62	62	62	62	62	62	62	62	62	62	62	62	62	62	62	62	62	62	62	62
	B	63	63	63	63	63	63	63	63	63	63	63	63	63	63	63	63	63	63	63	63	63	63	63	63	63	63	63	63	63	63	63	63	63	63	63	63	63	63	63	63	63	63	63	63	63	63	63	63
	A	63	63	63	63	63	63	63	63	63	63	63	63	63	63	63	63	63	63	63	63	63	63	63	63	63	63	63	63	63	63	63	63	63	63	63	63	63	63	63	63	63	63	63	63	63	63	63	63

spec ref	*	dr	Terran Huang	2010/11/03	projection	MM	size A4 / scale 1:10
tolerance std: ISO 406, ISO 1101	TOLERANCES UNLESS OTHERWISE SPECIFIED	eng	Rahul Mohan-M	2021/08/16			ecn no: ELX-I-41803-1
		chr	-	-			
		appr	Kuriakose, San	2021/08/16	product family	METRAL	rel level: Released
surface 3.200 ISO 1302	linear: 0.X ±0.3; 0.XX ±0.13; 0.XXX ±0.050; angular: 0° ±2°	Amphenol FCi	title: METRAL SIGNAL HEADER, 8 MOD, 4 ROW PRESS-FIT		dwg no: 89076		rev: V
		amphenol-icc.com	cat. no. -		Product - Customer Drw		sheet 4 of 11

Creo File:ELX-MC-A4C,REV F,2020-12-21

© 2020 Amphenol Corporation

METRAL P/N		CONTACT CODE MOD. 1						MOD. 2						MOD. 3						MOD. 4						MOD. 5						MOD. 6						MOD. 7						MOD. 8					
	ROW	1	2	3	4	5	6	7	8	9	10	11	12	13	14	15	16	17	18	19	20	21	22	23	24	25	26	27	28	29	30	31	32	33	34	35	36	37	38	39	40	41	42	43	44	45	46	47	48
89076-X21LF	D	61	61	61	61	61	61	61	61	61	61	61	61	61	61	61	61	61	61	61	61	61	61	61	61	61	61	61	61	61	61	61	61	61	61	61	61	61	61	61	61	61	61	61	61	61	61	61	61
	C	61	61	61	61	61	61	61	61	61	61	61	61	61	61	61	61	61	61	61	61	61	61	61	61	61	61	61	61	61	61	61	61	61	61	61	61	61	61	61	61	61	61	61	61	61	61	61	61
	B	63	63	63	63	63	63	63	63	63	63	63	63	63	63	63	63	63	63	63	63	63	63	63	63	63	63	63	63	63	63	63	63	63	63	63	63	63	63	63	63	63	63	63	63	63	63	63	63
	A	61	61	61	61	61	61	61	61	61	61	61	61	61	61	61	61	61	61	61	61	61	61	61	61	61	61	61	61	61	61	61	61	61	61	61	61	61	61	61	61	61	61	61	61	61	61	61	61

METRAL P/N		CONTACT CODE MOD. 1						MOD. 2						MOD. 3						MOD. 4						MOD. 5						MOD. 6						MOD. 7						MOD. 8					
	ROW	1	2	3	4	5	6	7	8	9	10	11	12	13	14	15	16	17	18	19	20	21	22	23	24	25	26	27	28	29	30	31	32	33	34	35	36	37	38	39	40	41	42	43	44	45	46	47	48
89076-X22LF	D	60	60	60	60	60	60	60	60	60	60	60	60	60	60	60	60	60	60	60	60	60	60	60	60	60	60	60	60	60	60	60	60	60	60	60	60	60	60	60	60	60	60	60	60	60	60	60	60
	C	60	60	60	60	60	60	60	60	60	60	60	60	60	60	60	60	60	60	60	60	60	60	60	60	60	60	60	60	60	60	60	60	60	60	60	60	60	60	60	60	60	60	60	60	60	60	60	60
	B	60	60	60	60	60	60	60	60	60	60	60	60	60	60	60	60	60	60	60	60	60	60	60	60	60	60	60	60	60	60	60	60	60	60	60	60	60	60	60	60	60	60	60	60	60	60	60	60
	A	60	60	60	60	60	60	60	60	60	60	60	60	60	60	60	60	60	60	60	60	60	60	60	60	60	60	60	60	60	60	60	60	60	60	60	60	60	60	60	60	60	60	60	60	60	60	60	60

METRAL P/N		CONTACT CODE MOD. 1						MOD. 2						MOD. 3						MOD. 4						MOD. 5						MOD. 6						MOD. 7						MOD. 8					
	ROW	1	2	3	4	5	6	7	8	9	10	11	12	13	14	15	16	17	18	19	20	21	22	23	24	25	26	27	28	29	30	31	32	33	34	35	36	37	38	39	40	41	42	43	44	45	46	47	48
89076-X23LF	D	62	62	62	62	62	62	62	62	62	62	62	62	62	62	62	62	62	62	62	62	62	62	62	62	62	62	62	62	62	62	62	62	62	62	62	62	62	62	62	62	62	62	62	62	62	62	62	62
	C	62	62	62	62	62	62	62	62	62	62	62	62	62	62	62	62	62	62	62	62	62	62	62	62	62	62	62	62	62	62	62	62	62	62	62	62	62	62	62	62	62	62	62	62	62	62	62	62
	B	62	62	62	62	62	62	62	62	62	62	62	62	62	62	62	62	62	62	62	62	62	62	62	62	62	62	62	62	62	62	62	62	62	62	62	62	62	62	62	62	62	62	62	62	62	62	62	62
	A	62	62	62	62	62	62	62	62	62	62	62	62	62	62	62	62	62	62	62	62	62	62	62	62	62	62	62	62	62	62	62	62	62	62	62	62	62	62	62	62	62	62	62	62	62	62	62	62

METRAL P/N		CONTACT CODE MOD. 1						MOD. 2						MOD. 3						MOD. 4						MOD. 5						MOD. 6						MOD. 7						MOD. 8					
	ROW	1	2	3	4	5	6	7	8	9	10	11	12	13	14	15	16	17	18	19	20	21	22	23	24	25	26	27	28	29	30	31	32	33	34	35	36	37	38	39	40	41	42	43	44	45	46	47	48
89076-X24LF	D	63	63	63	63	63	63	63	63	63	63	63	63	63	63	63	63	63	63	63	63	63	63	63	63	63	63	63	63	63	63	63	63	63	63	63	63	63	63	63	63	63	63	63	63	63	63	63	63
	C	63	63	63	63	63	63	63	63	63	63	63	63	63	63	63	63	63	63	63	63	63	63	63	63	63	63	63	63	63	63	63	63	63	63	63	63	63	63	63	63	63	63	63	63	63	63	63	63
	B	63	63	63	63	63	63	63	63	63	63	63	63	63	63	63	63	63	63	63	63	63	63	63	63	63	63	63	63	63	63	63	63	63	63	63	63	63	63	63	63	63	63	63	63	63	63	63	63
	A	63	63	63	63	63	63	63	63	63	63	63	63	63	63	63	63	63	63	63	63	63	63	63	63	63	63	63	63	63	63	63	63	63	63	63	63	63	63	63	63	63	63	63	63	63	63	63	63

METRAL P/N		CONTACT CODE MOD. 1						MOD. 2						MOD. 3						MOD. 4						MOD. 5						MOD. 6						MOD. 7						MOD. 8					
	ROW	1	2	3	4	5	6	7	8	9	10	11	12	13	14	15	16	17	18	19	20	21	22	23	24	25	26	27	28	29	30	31	32	33	34	35	36	37	38	39	40	41	42	43	44	45	46	47	48
89076-X25LF	D	40	40	40	40	40	40	40	40	40	40	40	40	40	40	40	40	40	40	40	40	40	40	40	40	40	40	40	40	40	40	40	40	40	40	40	40	40	40	40	40	40	40	40	40	40	40	40	40
	C	40	40	40	40	40	40	40	40	40	40	40	40	40	40	40	40	40	40	40	40	40	40	40	40	40	40	40	40	40	40	40	40	40	40	40	40	40	40	40	40	40	40	40	40	40	40	40	40
	B	40	40	40	40	40	40	40	40	40	40	40	40	40	40	40	40	40	40	40	40	40	40	40	40	40	40	40	40	40	40	40	40	40	40	40	40	40	40	40	40	40	40	40	40	40	40	40	40
	A	40	40	40	40	40	40	40	40	40	40	40	40	40	40	40	40	40	40	40	40	40	40	40	40	40	40	40	40	40	40	40	40	40	40	40	40	40	40	40	40	40	40	40	40	40	40	40	40

spec ref	*	dr	Terran Huang	2010/11/03	projection	MM	size A4 / scale 1:10
tolerance std: ISO 406, ISO 1101	TOLERANCES UNLESS OTHERWISE SPECIFIED	eng	Rahul Mohan-M	2021/08/16			ecn no: ELX-I-41803-1
		chr	-	-			
		appr	Kuriakose, San	2021/08/16	product family	METRAL	rel level: Released
surface 3.200 ISO 1302	linear: 0.X ±0.3; 0.XX ±0.13; 0.XXX ±0.050; angular: 0° ±2°	Amphenol FCi	title: METRAL SIGNAL HEADER, 8 MOD, 4 ROW PRESS-FIT		dwg no: 89076		rev: V
		amphenol-icc.com	cat. no. -		Product - Customer Drw		sheet 5 of 11

Creo File:ELX-MC-A4C,REV F,2020-12-21

© 2020 Amphenol Corporation

METRAL P/N	ROW	CONTACT CODE MOD. 1						MOD. 2						MOD. 3						MOD. 4						MOD. 5						MOD. 6						MOD. 7						MOD. 8					
		1	2	3	4	5	6	7	8	9	10	11	12	13	14	15	16	17	18	19	20	21	22	23	24	25	26	27	28	29	30	31	32	33	34	35	36	37	38	39	40	41	42	43	44	45	46	47	48
89076-X26LF	D	40	40	40	40	40	40	40	40	40	40	40	40	40	40	40	40	40	40	40	40	40	40	40	40	40	40	40	40	40	40	40	40	40	40	40	40	40	40	40	40	40	40	40	40	40	40	40	40
	C	40	40	40	40	40	40	40	40	40	40	40	40	40	40	40	40	40	40	40	40	40	40	40	40	40	40	40	40	40	40	40	40	40	40	40	40	40	40	40	40	40	40	40	40	40	40	40	40
	B	40	40	40	40	40	40	40	40	40	40	40	40	40	40	40	40	40	40	40	40	40	40	40	40	40	40	40	40	40	40	40	40	40	40	40	40	40	40	40	40	40	40	40	40	40	40	40	40
	A	41	41	41	41	41	41	41	41	41	41	41	41	41	41	41	41	41	41	41	41	41	41	41	41	41	41	41	41	41	41	41	41	41	41	41	41	41	41	41	41	41	41	41	41	41	41	41	41

METRAL P/N	ROW	CONTACT CODE MOD. 1						MOD. 2						MOD. 3						MOD. 4						MOD. 5						MOD. 6						MOD. 7						MOD. 8					
		1	2	3	4	5	6	7	8	9	10	11	12	13	14	15	16	17	18	19	20	21	22	23	24	25	26	27	28	29	30	31	32	33	34	35	36	37	38	39	40	41	42	43	44	45	46	47	48
89076-X27LF	D	41	41	41	41	41	41	41	41	41	41	41	41	41	41	41	41	41	41	41	41	41	41	41	41	41	41	41	41	41	41	41	41	41	41	41	41	41	41	41	41	41	41	41	41	41	41	41	41
	C	25	25	25	25	25	25	25	25	25	25	25	25	25	25	25	25	25	25	25	25	25	25	25	25	25	25	25	25	25	25	25	25	25	25	25	25	25	25	25	25	25	25	25	25	25	25	25	25
	B	25	25	25	25	25	25	25	25	25	25	25	25	25	25	25	25	25	25	25	25	25	25	25	25	25	25	25	25	25	25	25	25	25	25	25	25	25	25	25	25	25	25	25	25	25	25	25	25
	A	41	41	41	41	41	41	41	41	41	41	41	41	41	41	41	41	41	41	41	41	41	41	41	41	41	41	41	41	41	41	41	41	41	41	41	41	41	41	41	41	41	41	41	41	41	41	41	41

METRAL P/N	ROW	CONTACT CODE MOD. 1						MOD. 2						MOD. 3						MOD. 4						MOD. 5						MOD. 6						MOD. 7						MOD. 8					
		1	2	3	4	5	6	7	8	9	10	11	12	13	14	15	16	17	18	19	20	21	22	23	24	25	26	27	28	29	30	31	32	33	34	35	36	37	38	39	40	41	42	43	44	45	46	47	48
89076-X28LF	D	41	41	41	41	41	41	41	41	41	41	41	41	41	41	41	41	41	41	41	41	41	41	41	41	41	41	41	41	41	41	41	41	41	41	41	41	41	41	41	41	41	41	41	41	41	41	41	41
	C	41	41	41	41	41	41	41	41	41	41	41	41	41	41	41	41	41	41	41	41	41	41	41	41	41	41	41	41	41	41	41	41	41	41	41	41	41	41	41	41	41	41	41	41	41	41	41	41
	B	41	41	41	41	41	41	41	41	41	41	41	41	41	41	41	41	41	41	41	41	41	41	41	41	41	41	41	41	41	41	41	41	41	41	41	41	41	41	41	41	41	41	41	41	41	41	41	41
	A	41	41	41	41	41	41	41	41	41	41	41	41	41	41	41	41	41	41	41	41	41	41	41	41	41	41	41	41	41	41	41	41	41	41	41	41	41	41	41	41	41	41	41	41	41	41	41	41

METRAL P/N	ROW	CONTACT CODE MOD. 1						MOD. 2						MOD. 3						MOD. 4						MOD. 5						MOD. 6						MOD. 7						MOD. 8					
		1	2	3	4	5	6	7	8	9	10	11	12	13	14	15	16	17	18	19	20	21	22	23	24	25	26	27	28	29	30	31	32	33	34	35	36	37	38	39	40	41	42	43	44	45	46	47	48
89076-X29LF	D	25	25	25	25	25	25	25	25	25	25	25	25	25	25	25	25	25	25	25	25	25	25	25	25	25	25	25	25	25	25	25	25	25	25	25	25	25	25	25	25	25	25	25	25	25	25	25	25
	C	25	25	25	25	25	25	25	25	25	25	25	25	25	25	25	25	25	25	25	25	25	25	25	25	25	25	25	25	25	25	25	25	25	25	25	25	25	25	25	25	25	25	25	25	25	25	25	25
	B	42	42	42	42	42	42	42	42	42	42	42	42	42	42	42	42	42	42	42	42	42	42	42	42	42	42	42	42	42	42	42	42	42	42	42	42	42	42	42	42	42	42	42	42	42	42	42	42
	A	25	25	25	25	25	25	25	25	25	25	25	25	25	25	25	25	25	25	25	25	25	25	25	25	25	25	25	25	25	25	25	25	25	25	25	25	25	25	25	25	25	25	25	25	25	25	25	25

METRAL P/N	ROW	CONTACT CODE MOD. 1						MOD. 2						MOD. 3						MOD. 4						MOD. 5						MOD. 6						MOD. 7						MOD. 8					
		1	2	3	4	5	6	7	8	9	10	11	12	13	14	15	16	17	18	19	20	21	22	23	24	25	26	27	28	29	30	31	32	33	34	35	36	37	38	39	40	41	42	43	44	45	46	47	48
89076-X30LF	D	41	41	41	41	41	41	41	41	41	41	41	41	41	41	41	41	41	41	41	41	41	41	41	41	41	41	41	41	41	41	41	41	41	41	41	41	41	41	41	41	41	41	41	41	41	41	41	41
	C	42	42	42	42	42	42	42	42	42	42	42	42	42	42	42	42	42	42	42	42	42	42	42	42	42	42	42	42	42	42	42	42	42	42	42	42	42	42	42	42	42	42	42	42	42	42	42	42
	B	43	43	43	43	43	43	43	43	43	43	43	43	43	43	43	43	43	43	43	43	43	43	43	43	43	43	43	43	43	43	43	43	43	43	43	43	43	43	43	43	43	43	43	43	43	43	43	43
	A	43	43	43	43	43	43	43	43	43	43	43	43	43	43	43	43	43	43	43	43	43	43	43	43	43	43	43	43	43	43	43	43	43	43	43	43	43	43	43	43	43	43	43	43	43	43	43	43

spec ref	*	dr	Terran Huang	2010/11/03	projection	MM	size A4 / scale 1:10
tolerance std: ISO 406, ISO 1101	TOLERANCES UNLESS OTHERWISE SPECIFIED	eng	Rahul Mohan-M	2021/08/16			ecn no: ELX-I-41803-1
		chr	-	-			
		appr	Kuriakose, San	2021/08/16	product family	METRAL	rel level: Released
surface 3.200 ISO 1302	linear 0.X ±0.3; 0.XX ±0.13; 0.XXX ±0.050; angular 0° ±2°	Amphenol FCi	title: METRAL SIGNAL HEADER, 8 MOD, 4 ROW PRESS-FIT		dwg no: 89076		rev V
		amphenol-icc.com	cat. no. -		Product - Customer Drw		sheet 6 of 11

Creo File:ELX-MC-A4C,REV F,2020-12-21

© 2020 Amphenol Corporation

METRAL P/N		CONTACT CODE MOD. 1						MOD. 2						MOD. 3						MOD. 4						MOD. 5						MOD. 6						MOD. 7						MOD. 8					
	ROW	1	2	3	4	5	6	7	8	9	10	11	12	13	14	15	16	17	18	19	20	21	22	23	24	25	26	27	28	29	30	31	32	33	34	35	36	37	38	39	40	41	42	43	44	45	46	47	48
89076-X31LF	D	41	41	41	41	41	41	41	41	41	41	41	41	41	41	41	41	41	41	41	41	41	41	41	41	41	41	41	41	41	41	41	41	41	41	41	41	41	41	41	41	41	41	41	41	41	41	41	41
	C	41	41	41	41	41	41	41	41	41	41	41	41	41	41	41	41	41	41	41	41	41	41	41	41	41	41	41	41	41	41	41	41	41	41	41	41	41	41	41	41	41	41	41	41	41	41	41	41
	B	43	43	43	43	43	43	43	43	43	43	43	43	43	43	43	43	43	43	43	43	43	43	43	43	43	43	43	43	43	43	43	43	43	43	43	43	43	43	43	43	43	43	43	43	43	43	43	43
	A	41	41	41	41	41	41	41	41	41	41	41	41	41	41	41	41	41	41	41	41	41	41	41	41	41	41	41	41	41	41	41	41	41	41	41	41	41	41	41	41	41	41	41	41	41	41	41	41

METRAL P/N		CONTACT CODE MOD. 1						MOD. 2						MOD. 3						MOD. 4						MOD. 5						MOD. 6						MOD. 7						MOD. 8					
	ROW	1	2	3	4	5	6	7	8	9	10	11	12	13	14	15	16	17	18	19	20	21	22	23	24	25	26	27	28	29	30	31	32	33	34	35	36	37	38	39	40	41	42	43	44	45	46	47	48
89076-X32LF	D	42	42	42	42	42	42	42	42	42	42	42	42	42	42	42	42	42	42	42	42	42	42	42	42	42	42	42	42	42	42	42	42	42	42	42	42	42	42	42	42	42	42	42	42	42	42	42	42
	C	42	42	42	42	42	42	42	42	42	42	42	42	42	42	42	42	42	42	42	42	42	42	42	42	42	42	42	42	42	42	42	42	42	42	42	42	42	42	42	42	42	42	42	42	42	42	42	42
	B	42	42	42	42	42	42	42	42	42	42	42	42	42	42	42	42	42	42	42	42	42	42	42	42	42	42	42	42	42	42	42	42	42	42	42	42	42	42	42	42	42	42	42	42	42	42	42	42
	A	42	42	42	42	42	42	42	42	42	42	42	42	42	42	42	42	42	42	42	42	42	42	42	42	42	42	42	42	42	42	42	42	42	42	42	42	42	42	42	42	42	42	42	42	42	42	42	42

METRAL P/N		CONTACT CODE MOD. 1						MOD. 2						MOD. 3						MOD. 4						MOD. 5						MOD. 6						MOD. 7						MOD. 8					
	ROW	1	2	3	4	5	6	7	8	9	10	11	12	13	14	15	16	17	18	19	20	21	22	23	24	25	26	27	28	29	30	31	32	33	34	35	36	37	38	39	40	41	42	43	44	45	46	47	48
89076-X33LF	D	43	43	43	43	43	43	43	43	43	43	43	43	43	43	43	43	43	43	43	43	43	43	43	43	43	43	43	43	43	43	43	43	43	43	43	43	43	43	43	43	43	43	43	43	43	43	43	43
	C	43	43	43	43	43	43	43	43	43	43	43	43	43	43	43	43	43	43	43	43	43	43	43	43	43	43	43	43	43	43	43	43	43	43	43	43	43	43	43	43	43	43	43	43	43	43	43	43
	B	43	43	43	43	43	43	43	43	43	43	43	43	43	43	43	43	43	43	43	43	43	43	43	43	43	43	43	43	43	43	43	43	43	43	43	43	43	43	43	43	43	43	43	43	43	43	43	43
	A	43	43	43	43	43	43	43	43	43	43	43	43	43	43	43	43	43	43	43	43	43	43	43	43	43	43	43	43	43	43	43	43	43	43	43	43	43	43	43	43	43	43	43	43	43	43	43	43

METRAL P/N		CONTACT CODE MOD. 1						MOD. 2						MOD. 3						MOD. 4						MOD. 5						MOD. 6						MOD. 7						MOD. 8					
	ROW	1	2	3	4	5	6	7	8	9	10	11	12	13	14	15	16	17	18	19	20	21	22	23	24	25	26	27	28	29	30	31	32	33	34	35	36	37	38	39	40	41	42	43	44	45	46	47	48
89076-X34LF	D	11	11	11	11	11	11	11	11	11	11	11	11	11	11	11	11	11	11	11	11	11	11	11	11	11	11	11	11	11	11	11	11	11	11	11	11	11	11	11	11	11	11	11	11	11	11	11	11
	C	12	12	12	12	12	12	12	12	12	12	12	12	12	12	12	12	12	12	12	12	12	12	12	12	12	12	12	12	12	12	12	12	12	12	12	12	12	12	12	12	12	12	12	12	12	12	12	12
	B	21	21	21	21	21	21	21	21	21	21	21	21	21	21	21	21	21	21	21	21	21	21	21	21	21	21	21	21	21	21	21	21	21	21	21	21	21	21	21	21	21	21	21	21	21	21	21	21
	A	21	21	21	21	21	21	21	21	21	21	21	21	21	21	21	21	21	21	21	21	21	21	21	21	21	21	21	21	21	21	21	21	21	21	21	21	21	21	21	21	21	21	21	21	21	21	21	21

METRAL P/N		CONTACT CODE MOD. 1						MOD. 2						MOD. 3						MOD. 4						MOD. 5						MOD. 6						MOD. 7						MOD. 8					
	ROW	1	2	3	4	5	6	7	8	9	10	11	12	13	14	15	16	17	18	19	20	21	22	23	24	25	26	27	28	29	30	31	32	33	34	35	36	37	38	39	40	41	42	43	44	45	46	47	48
89076-X35LF	D	11	11	11	11	11	11	11	11	11	11	11	11	11	11	11	11	11	11	11	11	11	11	11	11	11	11	11	11	11	11	11	11	11	11	11	11	11	11	11	11	11	11	11	11	11	11	11	11
	C	11	11	11	11	11	11	11	11	11	11	11	11	11	11	11	11	11	11	11	11	11	11	11	11	11	11	11	11	11	11	11	11	11	11	11	11	11	11	11	11	11	11	11	11	11	11	11	11
	B	21	21	21	21	21	21	21	21	21	21	21	21	21	21	21	21	21	21	21	21	21	21	21	21	21	21	21	21	21	21	21	21	21	21	21	21	21	21	21	21	21	21	21	21	21	21	21	21
	A	11	11	11	11	11	11	11	11	11	11	11	11	11	11	11	11	11	11	11	11	11	11	11	11	11	11	11	11	11	11	11	11	11	11	11	11	11	11	11	11	11	11	11	11	11	11	11	11

spec ref	*	dr	Terran Huang	2010/11/03	projection	MM	size A4 / scale 1:10
tolerance std: ISO 406, ISO 1101	TOLERANCES UNLESS OTHERWISE SPECIFIED	eng	Rahul Mohan-M	2021/08/16			ecn no: ELX-I-41803-1
		chr	-	-			
		appr	Kuriakose, San	2021/08/16	product family	METRAL	rel level: Released

surface 3.200 ISO 1302	linear	0.X	±0.3
		0.XX	±0.13
		0.XXX	±0.050
	angular	0°	±2°

Amphenol FCi

title: METRAL SIGNAL HEADER
8 MOD, 4 ROW PRESS-FIT

dwg no: 89076

rev: V

amphenol-icc.com | cat. no. - | Product - Customer Drw | sheet 7 of 11

Creo File:ELX-MC-A4C,REV F,2020-12-21

© 2020 Amphenol Corporation

METRAL P/N		CONTACT CODE MOD. 1						MOD. 2						MOD. 3						MOD. 4						MOD. 5						MOD. 6						MOD. 7						MOD. 8					
	ROW	1	2	3	4	5	6	7	8	9	10	11	12	13	14	15	16	17	18	19	20	21	22	23	24	25	26	27	28	29	30	31	32	33	34	35	36	37	38	39	40	41	42	43	44	45	46	47	48
89076-X36LF	D	7	7	7	7	7	7	7	7	7	7	7	7	7	7	7	7	7	7	7	7	7	7	7	7	7	7	7	7	7	7	7	7	7	7	7	7	7	7	7	7	7	7	7	7	7	7	7	7
	C	8	8	8	8	8	8	8	8	8	8	8	8	8	8	8	8	8	8	8	8	8	8	8	8	8	8	8	8	8	8	8	8	8	8	8	8	8	8	8	8	8	8	8	8	8	8	8	8
	B	20	20	20	20	20	20	20	20	20	20	20	20	20	20	20	20	20	20	20	20	20	20	20	20	20	20	20	20	20	20	20	20	20	20	20	20	20	20	20	20	20	20	20	20	20	20	20	20
	A	20	20	20	20	20	20	20	20	20	20	20	20	20	20	20	20	20	20	20	20	20	20	20	20	20	20	20	20	20	20	20	20	20	20	20	20	20	20	20	20	20	20	20	20	20	20	20	20

METRAL P/N		CONTACT CODE MOD. 1						MOD. 2						MOD. 3						MOD. 4						MOD. 5						MOD. 6						MOD. 7						MOD. 8					
	ROW	1	2	3	4	5	6	7	8	9	10	11	12	13	14	15	16	17	18	19	20	21	22	23	24	25	26	27	28	29	30	31	32	33	34	35	36	37	38	39	40	41	42	43	44	45	46	47	48
89076-X37LF	D	7	7	7	7	7	7	7	7	7	7	7	7	7	7	7	7	7	7	7	7	7	7	7	7	7	7	7	7	7	7	7	7	7	7	7	7	7	7	7	7	7	7	7	7	7	7	7	7
	C	7	7	7	7	7	7	7	7	7	7	7	7	7	7	7	7	7	7	7	7	7	7	7	7	7	7	7	7	7	7	7	7	7	7	7	7	7	7	7	7	7	7	7	7	7	7	7	7
	B	20	20	20	20	20	20	20	20	20	20	20	20	20	20	20	20	20	20	20	20	20	20	20	20	20	20	20	20	20	20	20	20	20	20	20	20	20	20	20	20	20	20	20	20	20	20	20	20
	A	7	7	7	7	7	7	7	7	7	7	7	7	7	7	7	7	7	7	7	7	7	7	7	7	7	7	7	7	7	7	7	7	7	7	7	7	7	7	7	7	7	7	7	7	7	7	7	7

METRAL P/N		CONTACT CODE MOD. 1						MOD. 2						MOD. 3						MOD. 4						MOD. 5						MOD. 6						MOD. 7						MOD. 8					
	ROW	1	2	3	4	5	6	7	8	9	10	11	12	13	14	15	16	17	18	19	20	21	22	23	24	25	26	27	28	29	30	31	32	33	34	35	36	37	38	39	40	41	42	43	44	45	46	47	48
89076-X38LF	D	59	59	59	59	59	59	59	59	59	59	59	59	59	59	59	59	59	59	59	59	59	59	59	59	59	59	59	59	59	59	59	59	59	59	59	59	59	59	59	59	59	59	59	59	59	59	59	59
	C	59	59	59	59	59	59	59	59	59	59	59	59	59	59	59	59	59	59	59	59	59	59	59	59	59	59	59	59	59	59	59	59	59	59	59	59	59	59	59	59	59	59	59	59	59	59	59	59
	B	59	59	59	59	59	59	59	59	59	59	59	59	59	59	59	59	59	59	59	59	59	59	59	59	59	59	59	59	59	59	59	59	59	59	59	59	59	59	59	59	59	59	59	59	59	59	59	59
	A	59	59	59	59	59	59	59	59	59	59	59	59	59	59	59	59	59	59	59	59	59	59	59	59	59	59	59	59	59	59	59	59	59	59	59	59	59	59	59	59	59	59	59	59	59	59	59	59

METRAL P/N		CONTACT CODE MOD. 1						MOD. 2						MOD. 3						MOD. 4						MOD. 5						MOD. 6						MOD. 7						MOD. 8					
	ROW	1	2	3	4	5	6	7	8	9	10	11	12	13	14	15	16	17	18	19	20	21	22	23	24	25	26	27	28	29	30	31	32	33	34	35	36	37	38	39	40	41	42	43	44	45	46	47	48
89076-X39LF	D	-	-	-	-	-	-	-	-	-	-	-	-	-	-	-	-	-	-	-	-	-	-	-	-	-	-	-	-	-	-	-	-	-	-	-	-	-	-	-	-	-	-	-	-	-	-	-	-
	C	59	59	59	59	59	59	59	59	59	59	59	59	59	59	59	59	59	59	59	59	59	59	59	59	59	59	59	59	59	59	59	59	59	59	59	59	59	59	59	59	59	59	59	59	59	59	59	59
	B	59	59	59	59	59	59	59	59	59	59	59	59	59	59	59	59	59	59	59	59	59	59	59	59	59	59	59	59	59	59	59	59	59	59	59	59	59	59	59	59	59	59	59	59	59	59	59	59
	A	59	59	59	59	59	59	59	59	59	59	59	59	59	59	59	59	59	59	59	59	59	59	59	59	59	59	59	59	59	59	59	59	59	59	59	59	59	59	59	59	59	59	59	59	59	59	59	59

METRAL P/N		CONTACT CODE MOD. 1						MOD. 2						MOD. 3						MOD. 4						MOD. 5						MOD. 6						MOD. 7						MOD. 8					
	ROW	1	2	3	4	5	6	7	8	9	10	11	12	13	14	15	16	17	18	19	20	21	22	23	24	25	26	27	28	29	30	31	32	33	34	35	36	37	38	39	40	41	42	43	44	45	46	47	48
89076-X40LF	D	2	2	2	2	2	2	2	2	2	2	2	2	2	2	2	2	2	2	2	2	2	2	2	2	2	2	2	2	2	2	4	2	2	2	2	2	2	2	2	2	2	2	4	2	2	2	2	2
	C	2	2	2	2	2	2	2	2	2	2	2	2	2	2	2	2	2	2	2	2	2	2	2	2	2	2	2	2	2	2	4	2	2	2	2	2	2	2	2	2	2	2	4	2	2	2	2	2
	B	2	2	2	2	2	2	2	2	2	2	2	2	2	2	2	2	2	2	2	2	2	2	2	2	2	2	2	2	2	2	4	2	2	2	2	2	2	2	2	2	2	2	4	2	2	2	2	2
	A	2	2	2	2	2	2	2	2	2	2	2	2	2	2	2	2	2	2	2	2	2	2	2	2	2	2	2	2	2	2	4	2	2	2	2	1	2	2	2	2	2	2	4	2	2	2	2	1

spec ref	*	dr	Terran Huang	2010/11/03	projection	MM	size A4 / scale 1:10
tolerance std: ISO 406, ISO 1101	TOLERANCES UNLESS OTHERWISE SPECIFIED	eng	Rahul Mohan-M	2021/08/16			ecn no: ELX-I-41803-1
		chr	-	-			
		appr	Kuriakose, San	2021/08/16		product family: METRAL	rel level: Released

surface 3.200 ISO 1302			
	linear	0.X	±0.3
		0.XX	±0.13
		0.XXX	±0.050
	angular	0°	±2°

Amphenol FCi

title: METRAL SIGNAL HEADER
8 MOD, 4 ROW PRESS-FIT

dwg no: 89076

rev: V

amphenol-icc.com | cat. no. - | Product - Customer Drw | sheet 8 of 11

Creo File:ELX-MC-A4C,REV F,2020-12-21

© 2020 Amphenol Corporation

METRAL P/N		CONTACT CODE MOD. 1						MOD. 2						MOD. 3						MOD. 4						MOD. 5						MOD. 6						MOD. 7						MOD. 8					
	ROW	1	2	3	4	5	6	7	8	9	10	11	12	13	14	15	16	17	18	19	20	21	22	23	24	25	26	27	28	29	30	31	32	33	34	35	36	37	38	39	40	41	42	43	44	45	46	47	48
89076-X41LF	D	2	2	2	2	2	2	2	2	2	4	2	2	2	2	2	2	2	2	2	2	2	2	2	2	2	2	2	2	2	2	2	2	2	2	2	2	2	2	2	2	2	2	2	3	3	2	4	4
	C	2	2	2	2	2	2	2	2	2	4	2	2	2	2	2	2	2	2	2	2	2	2	2	2	2	2	2	2	2	2	2	2	2	2	2	2	2	2	2	2	2	2	2	3	3	2	4	4
	B	2	2	2	2	2	2	2	2	2	4	2	2	2	2	2	2	2	2	2	2	2	2	2	2	2	2	2	2	2	2	2	2	2	2	2	2	2	2	2	2	2	2	2	3	3	2	4	4
	A	2	2	2	2	2	2	2	2	2	4	2	2	2	2	2	2	2	2	2	2	2	2	2	2	2	2	2	2	2	2	2	2	2	2	2	2	2	2	2	2	2	2	2	3	3	2	4	4

METRAL P/N		CONTACT CODE MOD. 1						MOD. 2						MOD. 3						MOD. 4						MOD. 5						MOD. 6						MOD. 7						MOD. 8					
	ROW	1	2	3	4	5	6	7	8	9	10	11	12	13	14	15	16	17	18	19	20	21	22	23	24	25	26	27	28	29	30	31	32	33	34	35	36	37	38	39	40	41	42	43	44	45	46	47	48
89076-X42LF	D	4	2	2	2	2	2	2	2	2	1	2	2	2	2	2	2	2	2	2	2	2	2	2	2	2	2	2	2	2	2	2	2	2	2	2	2	2	2	2	2	2	2	2	3	3	2	4	4
	C	4	2	2	2	2	2	2	2	2	4	2	2	2	2	2	2	2	2	2	2	2	2	2	2	2	2	2	2	2	2	2	2	2	2	2	2	2	2	2	2	2	2	2	3	3	2	4	4
	B	4	2	2	2	2	2	2	2	2	2	2	2	2	2	2	2	2	2	2	2	2	2	2	2	2	2	2	2	2	2	2	2	2	2	2	2	2	2	2	2	2	2	2	3	3	2	4	4
	A	4	2	2	2	2	2	2	2	2	2	2	2	2	2	2	2	2	2	2	2	2	2	2	2	2	2	2	2	2	2	2	2	2	2	2	2	2	2	2	2	2	2	2	3	3	2	4	4

METRAL P/N		CONTACT CODE MOD. 1						MOD. 2						MOD. 3						MOD. 4						MOD. 5						MOD. 6						MOD. 7						MOD. 8					
	ROW	1	2	3	4	5	6	7	8	9	10	11	12	13	14	15	16	17	18	19	20	21	22	23	24	25	26	27	28	29	30	31	32	33	34	35	36	37	38	39	40	41	42	43	44	45	46	47	48
89076-X43LF	D	2	2	2	2	2	2	2	2	2	2	2	2	2	2	2	2	2	2	2	2	2	2	2	2	2	2	2	2	2	2	2	2	2	2	2	2	2	2	1	2	2	2	4	2	2	2	2	2
	C	2	2	2	2	2	2	2	2	2	2	2	2	2	2	2	2	2	2	2	2	2	2	2	2	2	2	2	2	2	2	2	2	2	2	2	2	2	2	2	2	2	2	4	2	2	2	2	2
	B	2	2	2	2	2	2	2	2	2	2	2	2	2	2	2	2	2	2	2	2	2	2	2	2	2	2	2	2	2	2	2	2	2	2	2	2	2	2	4	2	2	2	4	2	1	2	2	2
	A	2	2	2	2	2	2	2	2	2	2	2	2	2	2	2	2	2	2	2	2	2	2	2	2	2	2	2	2	2	2	2	2	2	2	2	2	2	2	1	1	2	2	4	2	2	2	2	1

METRAL P/N		CONTACT CODE MOD. 1						MOD. 2						MOD. 3						MOD. 4						MOD. 5						MOD. 6						MOD. 7						MOD. 8					
	ROW	1	2	3	4	5	6	7	8	9	10	11	12	13	14	15	16	17	18	19	20	21	22	23	24	25	26	27	28	29	30	31	32	33	34	35	36	37	38	39	40	41	42	43	44	45	46	47	48
89076-X44LF	D	2	2	2	2	2	2	2	2	2	2	2	2	2	2	2	2	2	2	2	2	2	2	2	2	2	2	2	2	2	2	2	2	2	2	2	2	2	2	1	2	2	2	4	2	2	2	2	2
	C	2	2	2	2	2	2	2	2	2	2	2	2	2	2	2	2	2	2	2	2	2	2	2	2	2	2	2	2	2	2	2	2	2	2	2	2	2	2	2	2	2	2	4	2	2	2	2	2
	B	2	2	2	2	2	2	2	2	2	2	2	2	2	2	2	2	2	2	2	2	2	2	2	2	2	2	2	2	2	2	2	2	2	2	2	2	2	2	4	2	2	2	4	2	1	2	2	2
	A	2	2	2	2	2	2	2	2	2	2	2	2	2	2	2	2	2	2	2	2	2	2	2	2	2	2	2	2	2	2	2	2	2	4	2	2	2	2	1	1	2	2	4	2	2	2	2	1

METRAL P/N		CONTACT CODE MOD. 1						MOD. 2						MOD. 3						MOD. 4						MOD. 5						MOD. 6						MOD. 7						MOD. 8					
	ROW	1	2	3	4	5	6	7	8	9	10	11	12	13	14	15	16	17	18	19	20	21	22	23	24	25	26	27	28	29	30	31	32	33	34	35	36	37	38	39	40	41	42	43	44	45	46	47	48
89076-X45LF	D	2	2	2	2	2	2	2	2	2	2	2	2	2	2	2	2	2	2	2	2	2	2	2	2	2	2	2	2	2	2	2	2	2	2	2	2	2	2	2	2	2	2	4	2	2	2	2	2
	C	2	2	2	2	2	2	2	2	2	2	2	2	2	2	2	2	2	2	2	2	2	2	2	2	2	2	2	2	2	2	2	2	2	2	2	2	2	2	2	2	2	2	4	2	2	2	2	2
	B	2	2	2	2	2	2	2	2	2	2	2	2	2	2	2	2	2	2	2	2	2	2	2	2	2	2	2	2	2	2	2	2	2	2	2	2	2	2	2	2	2	2	4	2	2	2	2	2
	A	2	2	2	2	2	2	2	2	2	2	2	2	2	2	2	2	2	2	2	2	2	2	2	2	2	2	2	2	2	2	2	2	2	2	2	2	2	2	2	2	2	2	4	2	2	2	2	1

spec ref	*	dr	Terran Huang	2010/11/03	projection	MM	size A4 / scale 1:10
tolerance std ISO 406 ISO 1101	TOLERANCES UNLESS OTHERWISE SPECIFIED	eng	Rahul Mohan-M	2021/08/16			ecn no ELX-I-41803-1
		chr	-	-			
		appr	Kuriakose, San	2021/08/16		product family METRAL	rel level **Released**

surface 3.200 ISO 1302			
	linear	0.X	±0.3
		0.XX	±0.13
		0.XXX	±0.050
	angular	0°	±2°

Amphenol FCi

title: METRAL SIGNAL HEADER
8 MOD, 4 ROW PRESS-FIT

dwg no: 89076

rev: **V**

amphenol-icc.com | cat. no. - | Product - Customer Drw | sheet 9 of 11

Creo File:ELX-MC-A4C,REV F,2020-12-21

© 2020 Amphenol Corporation

METRAL P/N	ROW	CONTACT CODE MOD. 1						MOD. 2						MOD. 3						MOD. 4						MOD. 5						MOD. 6						MOD. 7						MOD. 8					
		1	2	3	4	5	6	7	8	9	10	11	12	13	14	15	16	17	18	19	20	21	22	23	24	25	26	27	28	29	30	31	32	33	34	35	36	37	38	39	40	41	42	43	44	45	46	47	48
89076-X46LF	D	1	1	19	1	1	19	1	1	19	1	1	19	1	1	19	1	1	19	1	1	19	1	1	19	1	1	19	1	1	19	1	1	19	1	1	19	1	1	19	1	1	19	1	1	19	1	1	19
	C	19	1	1	19	1	1	19	1	1	19	1	1	19	1	1	19	1	1	19	1	1	19	1	1	19	1	1	19	1	1	19	1	1	19	1	1	19	1	1	19	1	1	19	1	1	19	1	1
	B	1	19	1	1	19	1	1	19	1	1	19	1	1	19	1	1	19	1	1	19	1	1	19	1	1	19	1	1	19	1	1	19	1	1	19	1	1	19	1	1	19	1	1	19	1	1	19	1
	A	1	1	19	1	1	19	1	1	19	1	1	19	1	1	19	1	1	19	1	1	19	1	1	19	1	1	19	1	1	19	1	1	19	1	1	19	1	1	19	1	1	19	1	1	19	1	1	19

METRAL P/N	ROW	CONTACT CODE MOD. 1						MOD. 2						MOD. 3						MOD. 4						MOD. 5						MOD. 6						MOD. 7						MOD. 8					
		1	2	3	4	5	6	7	8	9	10	11	12	13	14	15	16	17	18	19	20	21	22	23	24	25	26	27	28	29	30	31	32	33	34	35	36	37	38	39	40	41	42	43	44	45	46	47	48
89076-X47LF	D	1	1	-	1	-	1	-	1	-	1	-	1	-	1	-	1	-	1	-	1	-	-	-	1	-	1	-	1	-	1	-	1	-	1	-	1	-	1	-	1	-	1	-	1	-	1	-	1
	C	1	-	1	-	1	-	1	-	1	-	1	-	1	-	1	-	1	-	1	-	1	-	1	-	1	-	1	-	1	-	1	-	1	-	1	-	1	-	1	-	1	-	1	-	1	-	1	-
	B	1	1	-	1	-	1	-	1	-	1	-	1	-	1	-	1	-	1	-	1	-	1	-	1	-	1	-	1	-	-	-	-	-	-	-	1	-	1	-	1	-	1	-	1	-	1	-	1
	A	-	-	-	-	-	-	-	-	-	-	-	-	-	-	-	-	-	-	-	-	-	-	-	-	-	-	-	-	-	-	-	-	-	-	-	-	-	-	-	-	-	-	-	-	-	-	-	-

METRAL P/N	ROW	CONTACT CODE MOD. 1						MOD. 2						MOD. 3						MOD. 4						MOD. 5						MOD. 6						MOD. 7						MOD. 8					
		1	2	3	4	5	6	7	8	9	10	11	12	13	14	15	16	17	18	19	20	21	22	23	24	25	26	27	28	29	30	31	32	33	34	35	36	37	38	39	40	41	42	43	44	45	46	47	48
89076-X48LF	D	3	3	3	3	3	3	3	3	3	3	3	3	3	3	3	3	3	3	3	3	3	3	3	3	3	3	3	3	3	3	3	3	3	3	3	3	3	3	3	3	3	3	3	3	3	3	3	1
	C	3	3	3	3	3	3	3	3	3	3	3	3	3	3	3	3	3	3	3	3	3	3	3	3	3	3	3	3	3	3	3	3	3	3	3	3	3	3	3	3	3	3	3	3	3	3	3	19
	B	3	3	3	3	3	3	3	3	3	3	3	3	3	3	3	3	3	3	3	3	3	3	3	3	3	3	3	3	3	3	3	3	3	3	3	3	3	3	3	3	3	3	3	3	3	3	3	19
	A	3	3	3	3	3	3	3	3	3	3	3	3	3	3	3	3	3	3	3	3	3	3	3	3	3	3	3	3	3	3	3	3	3	3	3	3	3	3	3	3	3	3	3	3	3	3	3	19

METRAL P/N	ROW	CONTACT CODE MOD. 1						MOD. 2						MOD. 3						MOD. 4						MOD. 5						MOD. 6						MOD. 7						MOD. 8					
		1	2	3	4	5	6	7	8	9	10	11	12	13	14	15	16	17	18	19	20	21	22	23	24	25	26	27	28	29	30	31	32	33	34	35	36	37	38	39	40	41	42	43	44	45	46	47	48
89076-X49LF	D	1	1	3	1	1	1	1	1	3	1	1	1	1	1	3	1	1	1	1	1	1	1	1	1	1	1	1	1	1	1	1	1	1	1	1	1	1	1	1	1	1	1	1	1	1	1	1	1
	C	1	1	3	1	1	1	1	1	3	1	1	1	1	1	3	1	1	1	1	1	1	1	1	1	1	1	1	1	1	1	1	1	1	1	1	1	1	1	1	1	1	1	1	1	1	1	1	1
	B	1	1	1	1	1	3	1	1	1	1	1	3	1	1	1	1	1	1	3	1	1	1	1	1	1	1	1	1	1	1	1	1	1	1	1	1	1	1	1	1	1	1	1	1	1	1	1	1
	A	1	1	1	1	1	3	1	1	1	1	1	3	1	1	1	1	1	1	3	1	1	1	1	1	1	1	1	1	1	1	1	1	1	1	1	1	1	1	1	1	1	1	1	1	1	1	1	1

spec ref	*	dr	Terran Huang	2010/11/03	projection	MM	size A4 / scale 1:10
tolerance std: ISO 406, ISO 1101	TOLERANCES UNLESS OTHERWISE SPECIFIED	eng	Rahul Mohan-M	2021/08/16			ecn no: ELX-I-41803-1
		chr	-	-			
		appr	Kuriakose, San	2021/08/16	product family	METRAL	rel level: Released

surface 3.200 ISO 1302			
	linear	0.X	±0.3
		0.XX	±0.13
		0.XXX	±0.050
	angular	0°	±2°

Amphenol FCi

title: METRAL SIGNAL HEADER
8 MOD, 4 ROW PRESS-FIT

dwg no: 89076

rev: V

amphenol-icc.com | cat. no. - | Product - Customer Drw | sheet 10 of 11

Creo File:ELX-MC-A4C,REV F,2020-12-21

© 2020 Amphenol Corporation

NOTES:

1. FOR DIM A AND B SEE SHEET 2 AND UP.
2. BODY MATERIAL : THERMOPLASTIC UL94-V0. △
3. PIN MATERIAL : COPPER ALLOY. △
4. FOR PLATING PERFORMANCE LEVEL REFER DRAWING # 1059408. △
5. PRODUCT MARKING : PART NUMBER DESIGNATION & BATCH I.D.
6. ALL PRODUCTS WITH PART NUMBERS SHOWN IN SUBSEQUENT TABLES WILL BE PACKAGED IN TUBES.
   IF TRAY PACKAGING IS REQUIRED, A SUFFIX "P" WILL BE ADDED TO THE END OF THE PART NUMBER.
   EXAMPLE: XXXXX-XXXP OR XXXXX-XXXLP,
7. PRODUCT SPECIFICATION GS-12-180
   APPLICATION SPECIFICATION BUS-20-073
8. AFTER INSERTION INTO CIRCUIT BOARD WITH QUALIFIED TOOL.
9. THE PRODUCTS WHERE THE PART NUMBER ENDS IN LF MEET THE EUROPEAN UNION DIRECTIVES AND OTHER COUNTRY REGULATIONS △
   AS DESCRIBED IN GS-47-0004.

   ALL PRODUCTS WILL WITHSTAND EXPOSURE TO 260°C FOR 60 SECONDS IN A CONVECTION, INFRA-RED OR △
   VAPOR PHASE REFLOW OVEN. THE Au CONTACT SURFACE OF THE CONTACTS SHALL BE EXPOSED TO A MAXIMIM 140°C FOR
   NO LONGER THAN 15 SECONDS IN A WAVE SOLDER APPLICATION.
10. A △ SYMBOL WILL BE NEXT TO ANY DIMENSION, VIEW, OR NOTE WHICH HAS BEEN MODIFIED WITH THE CURRENT DRAWING REVISION.

spec ref	*			dr	Terran Huang	2010/11/03	projection	MM	size A4 / scale 1:10
tolerance std	TOLERANCES UNLESS OTHERWISE SPECIFIED			eng	Rahul Mohan-M	2021/08/16			
ISO 406 ISO 1101				chr	-	-			ecn no ELX-I-41803-1
				appr	Kuriakose, San	2021/08/16	product family	METRAL	rel level Released
surface 3.200	linear	0.X	±0.3	Amphenol FCi	title METRAL SIGNAL HEADER		dwg no 89076		rev V
		0.XX	±0.13		8 MOD, 4 ROW PRESS-FIT				
		0.XXX	±0.050						
ISO 1302	angular	0°	±2°	amphenol-icc.com	cat. no. -		Product - Customer Drw		sheet 11 of 11

Creo File:ELX-MC-A4C,REV F,2020-12-21

© 2020 Amphenol Corporation