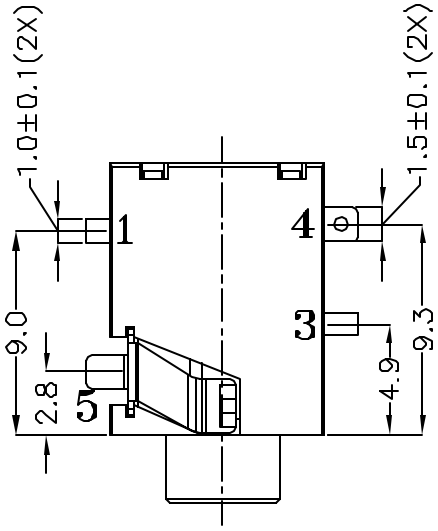

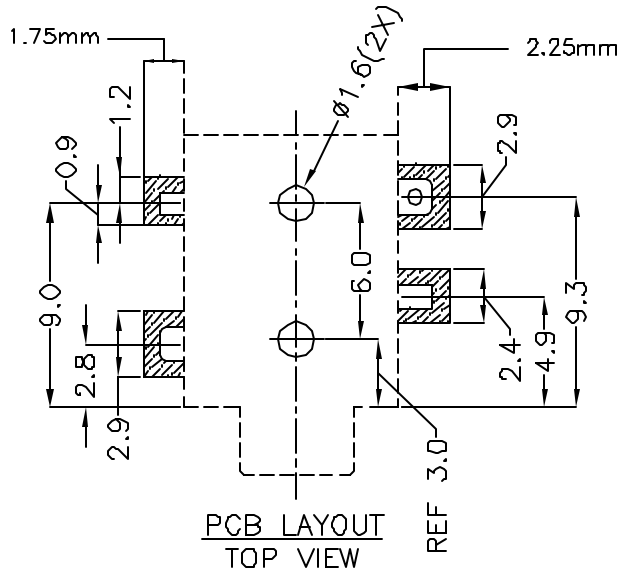

PCB LAYOUT
TOP VIEW

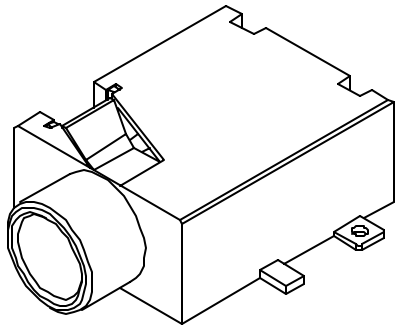

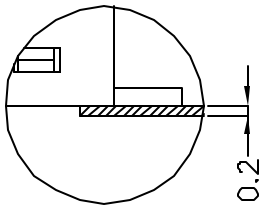

COPLANARITY

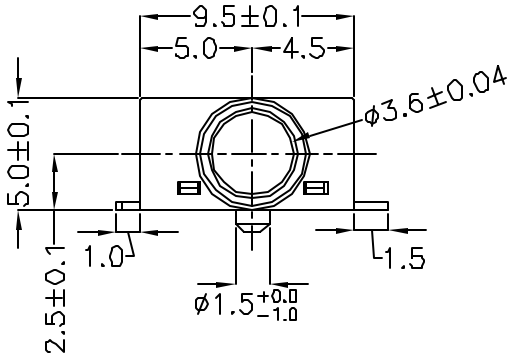

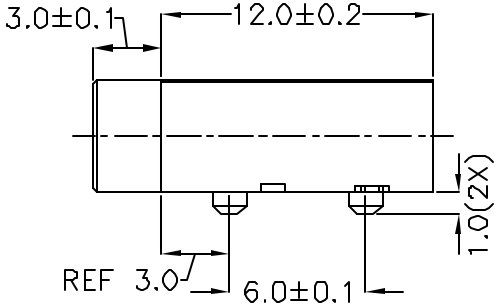

NO.	PART NAME	MATERIAL	PLATING	REMARKS
X	HOUSING	POLYAMIDE	X	UL94V0
X	BOTTOM COVER	POLYAMIDE	X	UL94V0
1	RING TERMINAL	Cu−Ti	GOLD FLASH	25 MICRONS
3	SHUNT TERMINAL	BRASS	GOLD FLASH	30 MICRONS
4	TIP TERMINAL	Cu−Ti	GOLD FLASH	25 MICRONS
5	SLEEVE (EARTH) TERMINAL	PBS	GOLD FLASH	30 MICRONS

SPECIFICATIONS:
1. RATED VOLTAGE−16 VDC
2. RATED CURRENT−300 mA
3. CONTACT RESISTANCE−100 mOHMS OR LESS UNDER ALL CONDITIONS, INCLUDING AFTER LIFE TESTING.
4. INSULATION RESISTANCE−100 MOHMS OR GREATER AT 500 VDC.
5. DIELECTRIC WITHSTAND VOLTAGE−500 VAC RMS FOR 1 MINUTE.

SCHEMATIC

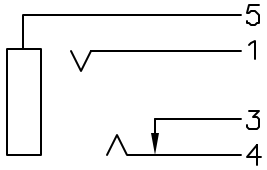

CUI INC
9815 SW Allen, Suite 103
Beaverton, OR 97005
Phone: (503) 643−4899
800−275−4899
Fax: (503) 372−1286
Website: www.cui.com

TITLE: 3.5mm SURFACE MOUNT AUDIO JACK-STEREO

PART NO. SJ−3514−SMT | UNITS: Millimeters

DRAWN BY: Todd R. White | APPROVED BY: | SCALE: 3X

PC FILE NAME: SJ−3514−SMT.DWG

COPYRIGHT 1999 BY CUI INC.